cubigel® compressors

GENERAL CATALOGUE

Compressors

for Commercial Refrigeration
R134a · R404A · R507 · R600a · R290 · R1234yf

HUAYI
COMPRESSOR
BARCELONA

For every type of application

The most complete range of products

Sustainable Cooling

Natural Refrigerants

Low energy consumption

Worldwide presence

Mobile applications

HUAYI COMPRESSOR BARCELONA

Leading manufacturer
of compressors

Huayi Compressor Barcelona focuses on developing advanced compressor technologies to meet the commercial refrigeration market requirements worldwide.

More than 50 years

of experience in designing, manufacturing and selling hermetic compressors and condensing units for the commercial refrigeration market

Index

1. General Information

The Company 9
The Product 11
Family of Compressors and Condensing Units 12
The Green Cooling Ranges 14
DC Compressors for mobile applications 16
Condensing Units 17

2. Compressor Information

Compressor ranges by Cooling Capacity 20
Labels and Approvals 23
Nomenclature U, L, P, X and S ranges 24
Nomenclature Small L & B ranges 25
SOA 26
Voltage 28
Type of Electrical Motors 28
How to Read this Catalogue 29

3. Compressors Catalogue

R290 / R600a 32
R134a 40
R404A / R507 48
DC and Variable Speed Compressors 54

4. Technical Information

Technical Datasheets online 58
Compressor Dimensional Drawings 60
Fixings 64
Wiring Diagrams and Electrical Assembly 66
Packaging & Logistics 72

HUAYI

1.

General Information

Research and Development

Leadership

Reliability

Innovation

Cutting-edge technology

People

The Company

Huayi Group has a global presence; headquarters in China and subsidiaries in Europe.

Huayi Compressor Co., Ltd.

Huayi Compressor Co., Ltd. was founded in 1990, located in Jingdezhen, China, and is a worldwide leader of household compressor manufacturing. It specializes in the production of hermetic compressors with a complete range from 40W to 400W for refrigerators, water dispensers and dehumidifiers, among other household appliances.

The core value of the company is "Employee, Customer and Shareholder Satisfaction".

Huayi Compressor Barcelona, S.L.

Huayi Compressor Barcelona, S.L., subsidiary of Huayi Group, was founded in 1962 under the name of Unidad Hermética with the aim of producing hermetic compressors and cooling equipment. Today, the company belongs to Huayi Compressors Co. Ltd.

Oriented to develop quality product supported by European production, with more than 100 million compressors produced under the Cubigel Compressors® brand, the company mission has remained the same during more than 50 years of experience developing compressors and satisfying the refrigeration market trends of Commercial Refrigeration.

The compressors are designed to optimize energy consumption to reduce the effects of Global Warming, which are the goals of innovative R&D, focused on developing a wide range of products apt for the market requirements.

The Product

Extended range of compressors

The most complete range of hermetic compressors for every commercial application under the Cubigel Compressor® brand. The offer includes more than 500 different models of compressors from ranges of 2.2 to 38cc, in most refrigerant gases, main voltages and types of applications.

Condensing Units

High quality hermetic condensing units with a wide range of options for most Commercial Refrigeration applications being also able to work under tropical temperature conditions. The range of condensing unit models covers both standard and customized versions.

The green cooling ranges

The advanced design of the Green Cooling ranges allows a remarkable efficiency improvement. These ranges comprise High Efficiency, Natural Refrigerants and the Variable Speed Compressors. This last one is crucial to reduce refrigeration energy consumption as the motor is electronically controlled.

Compressors for mobile applications

The best DC power supply compressors for mobile applications that are used in recreational vehicles, such as boats, caravans, cars that are equipped with refrigerators and freezers; and also in trucks or other transportation vehicles equipped with air conditioners in the sleeping cabins.

Family of Compressors and Condensing Units

Small L range

Features:
More compact, more efficient
Range:
2.20 to 3.10 cc
Refrigerants:
R134a, R600a
Applications:
Small refrigerators and freezers

B range

Features:
More displacement, more efficient, compactness
Range:
2.20 to 6.50 cc
Refrigerants:
R134a, R600a, R290
Applications:
Water coolers, can / bottle coolers, small refrigerator and freezers

U range

Features:
The most efficient, Compact size, Extremely silent, Green Cooling
Range:
4.50 to 8.90 cc
Refrigerants:
R134a, R290, R600a, R1234yf
Applications:
Ice Cream Freezers, Bottle Coolers, Chest coolers, Freezers, Refrigerated display counters, Display cabinets

L range

Features:
The highest efficient range with propane (R290) & isobutene (R600a)
Range:
4.56 to 10.7 cc
Refrigerants:
R134a, R404A, R452A, R600a, R290, R507, R1234yf
Applications:
Household Refrigerators, Bottle Coolers and Freezers, Can Coolers, Chest Freezers, Vending Machines, Ice Cream Freezers, Beer Dispensers, Ice Makers, Soft Drink Dispensers, Heat Pumps Systems

P
range

Features:
High Efficiency versions
The highest efficient range with propane (R290) & isobutene (R600a)
Range:
12.10 to 18.00 cc
Refrigerants:
R134a, R404A, R452A, R600a, R290, R507, R1234yf
Applications:
Household Refrigerators, Bottle Coolers and Freezers, Can Coolers, Chest Freezers, Vending Machines, Ice Cream Freezers, Beer Dispensers, Ice Makers, Soft Drink Dispensers

X
range

Features:
High reliability & efficiency. New design to work under heavy duty operation conditions
Range:
16.03 to 23.20 cc
Refrigerants:
R134a, R404A, R452A, R290, R407C, R507, R1234yf
Applications:
Large Freezers (vertical and chest), Blast Freezers, Ice Makers, Vending Machines, Display Cabinets, Display Islands, Soft Drink Dispensers

S
range

Features:
Top capacity range, Optimized design to reduce vibration
Range:
18.10 to 38 cc
Refrigerants:
R290, R134a, R404A, R452A, R407C, R507, R1234yf, R290
Applications:
Large Freezers (vertical and chest), Soft drinks dispensers, Blast Freezers, Air Dryers, Ice Makers, Air Conditioning, Vending Machines, Heat Pumps, Display, Cabinets and Islands

CONDENSING UNITS

Features:
Complete range of Condensing Units from 2.20 to 34.42 cc
High reliability & top-quality components
Specific customized versions
Designed to work under 43º C tropical conditions
Refrigerants:
R134a, R404A, R290, R407C, R507, R1234yf
Applications:
Suitable for all applications

The Green Cooling Ranges

The most extended range of compressors for sustainable refrigeration in terms of energy consumption reduction.

The advanced design of the Green Cooling Ranges allows efficiency improvement providing energy consumption reductions up to 45% compared to standard versions; consequently, lower CO_2 emissions to the atmosphere.

The Green Cooling Ranges comprise High Efficiency, Natural Refrigerants and Variable Speed Compressors.

The Green Cooling range gets to improve the compressor COP between 20% and 30% in comparison with standard ranges.

High Efficiency Ranges

The High Efficiency models reduce energy consumption of commercial refrigeration appliances between 10% and 30% with respect to standard ranges. Most High-Efficiency models are equipped with electric motors, designed with the "optional run capacitor" concept, that is, the compressor can work with or without a running capacitor (CSR/CSIR), offering the level of efficiency with the same compressor.

Natural Refrigerants

Natural refrigerants like propane (R290) and isobutene (R600a) are being gradually introduced in commercial appliances, not only due to the replacement of H-CFC's and HFC's refrigerants which have high impact on environment, but also because it is more efficient in terms of performance and applications' energy consumption.

Refrigerant propane has no direct contribution to global warming and its energy consumption is between 10% to 15% lower than a similar application with R404A. The Cubigel Compressors® R290 compressors offer a higher cooling capacity and COP allowing energy-saving consumption with smaller displacement.

The major environmental benefits are obtained combining the use of the R290 with the design criteria of high efficiency ranges. These compressor models, in their more advanced version can save up to 50% of energy when compared with standard efficiency series of R404A thanks to its high-efficiency mechanics, its advanced motor winding design and the optional running capacitor concept.

Variable Speed Compressors

The Variable Speed Compressor offers the lowest energy consumption by means of electronically self-adjusting the compressor's speed to the appliance's cooling needs, while improving COP up to 50%.

Using Smart Speed® software with communication capabilities, this compressor automatically achieves the best efficiency for the appliance while dynamically adapting the compressor's speed to the needed cooling capacity.

The major benefit can be obtained with a Variable Speed Compressor combined with the use of natural refrigerants, achieving a better performance with no contribution to global warming.

Variable Speed Compressors

Features:
High Efficiency, Flexible Speed Drive
Drop-in Configuration
External Controlling
200-240 V / 50-60Hz
Models:
GLT99FSN, NPT12FSC, NLT60FSN, NVT70FSC
Refrigerant:
R290, R134a

DC Compressors for mobile applications

The Cubigel Compressors mobile cooling solutions for transportation vehicles are designed to operate from a 24-42V DC power supply. These compressors are designed for mobile DC applications in boats, trucks, private cars, medical appliances in ambulances, truck cabin air conditioners, among others.

The GLT80TDC is the answer to the needs of users requiring comfort and reliability while traveling, either on holidays, at work or in any other circumstance where a DC powered air conditioner is utilized.

The GLT80TDC is designed to operate from a low voltage DC power supply to operate silently, efficiently and reliably even up to angles of tilt of 30º / 20º respectively, working with refrigerant R134a.

The electronic driver from all Mobile Compressors include the Smart Speed® programming option, which is a plug-in system for automatically self-adapting compressor speed to the current thermal load.

DC Compressors Range

Features:
DC compressors for mobile applications, exceptionally silent
Ready to work under heavy duty operating conditions
24-42V DC
Models:
GLT80TDC.
Refrigerant:
R134a

Condensing Units

Cubigel Compressors offers a complete range of Condensing Units either standard or customized version, along with a wide variety of components to assemble customized condensing units.

Features, Benefits and Customized versions

Features and Benefits

- Complete range from 2.2 to 38 cc
- High reliability & top-quality components
- High Efficiency version available
- Specific customized range
- Designed to work under 43ºC
- Suitable for all refrigerants & applications

Condensing Units

Main specific components

- Special power supply cable
- Special assembly supports (base plates)
- Dryer filters included (ceramic, molecular)
- Special pressure switches
- Non-assembled components
- Thermostat cables
- Special copper tubes (T connections)
- Sight glass
- Schrader valves
- Specific packaging
- Capillary tube
- Evaporating tray

Main specific services

- Units UL approved on request
- Certified laboratory facilities at customer disposal
- Quick prototype building
- Quick quotation system

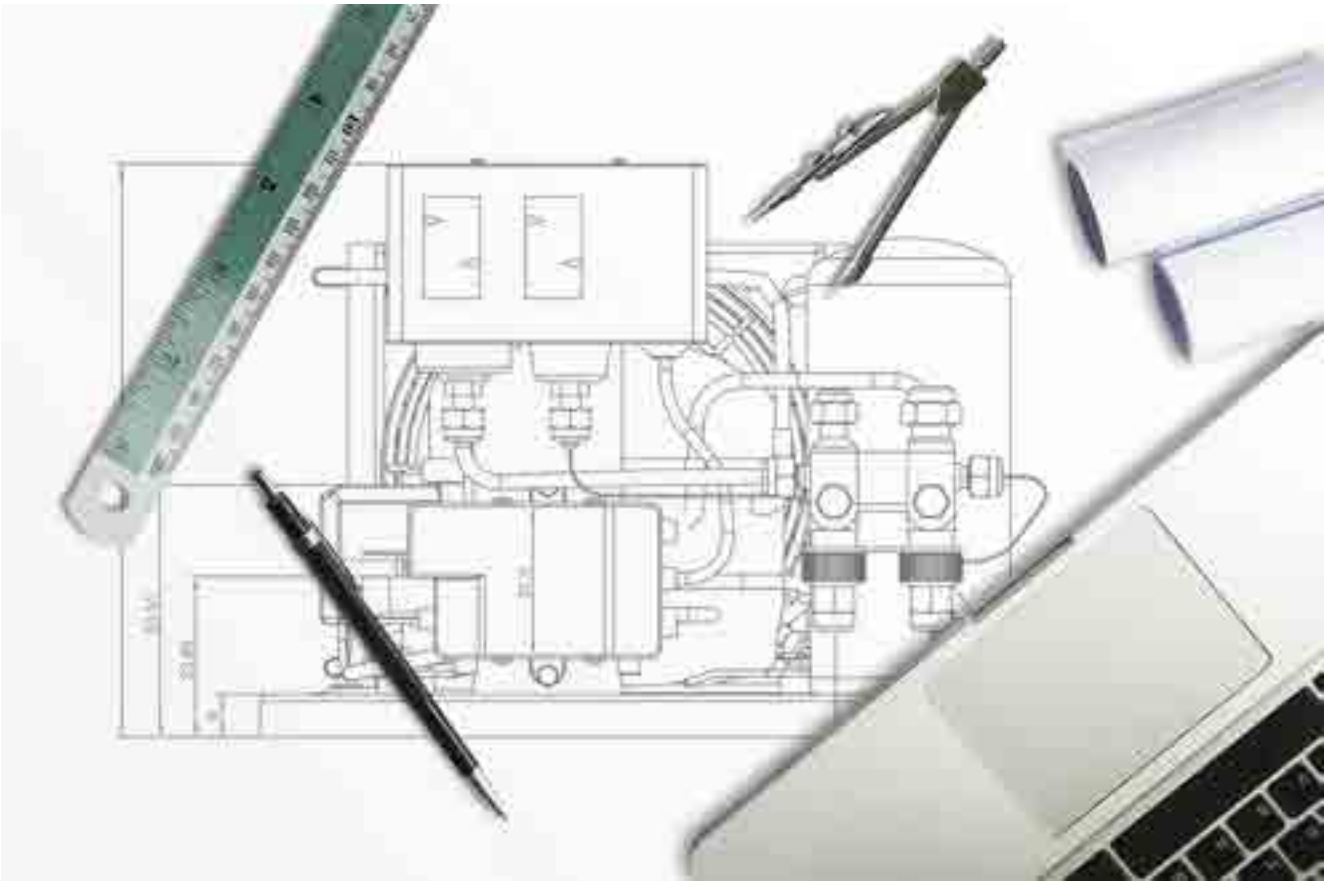

2.

Compressor Information

Compressors ranges by Cooling Capacity

Compressors Ranges Small L & B

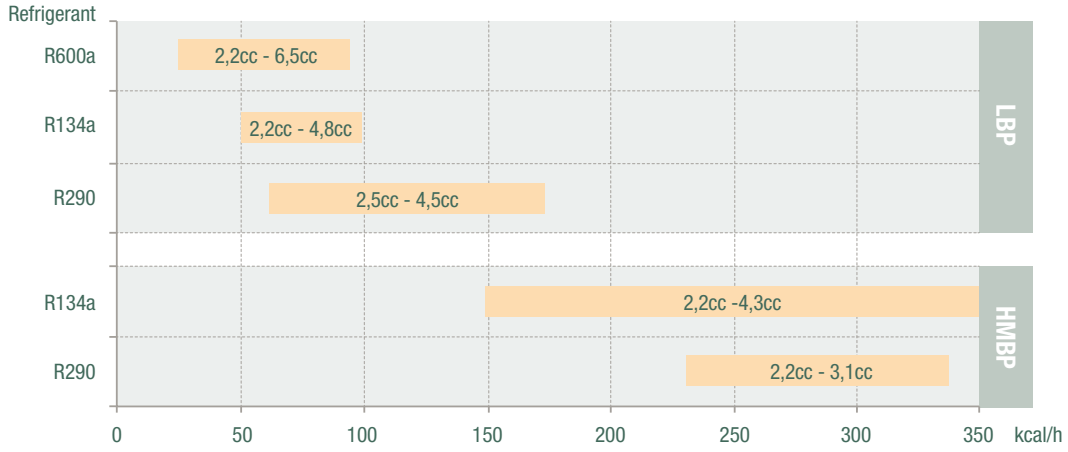

Compressors Ranges U

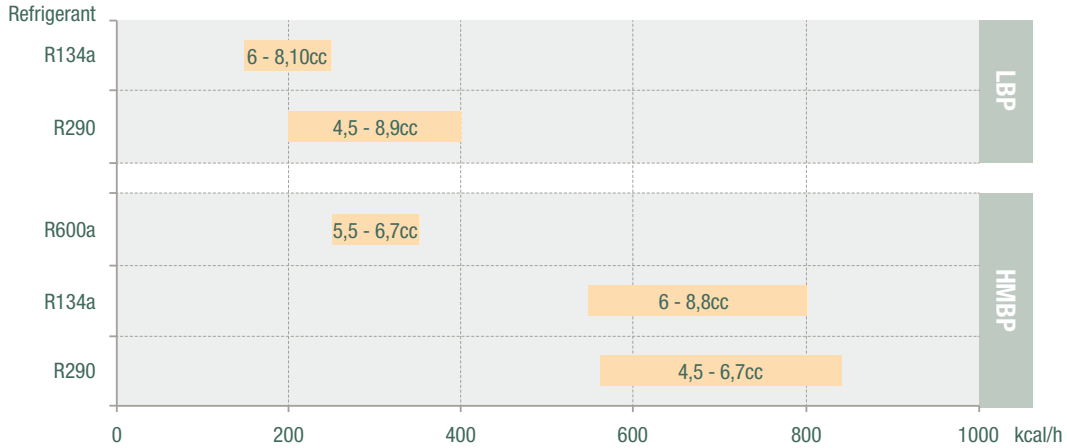

Compressors Ranges L

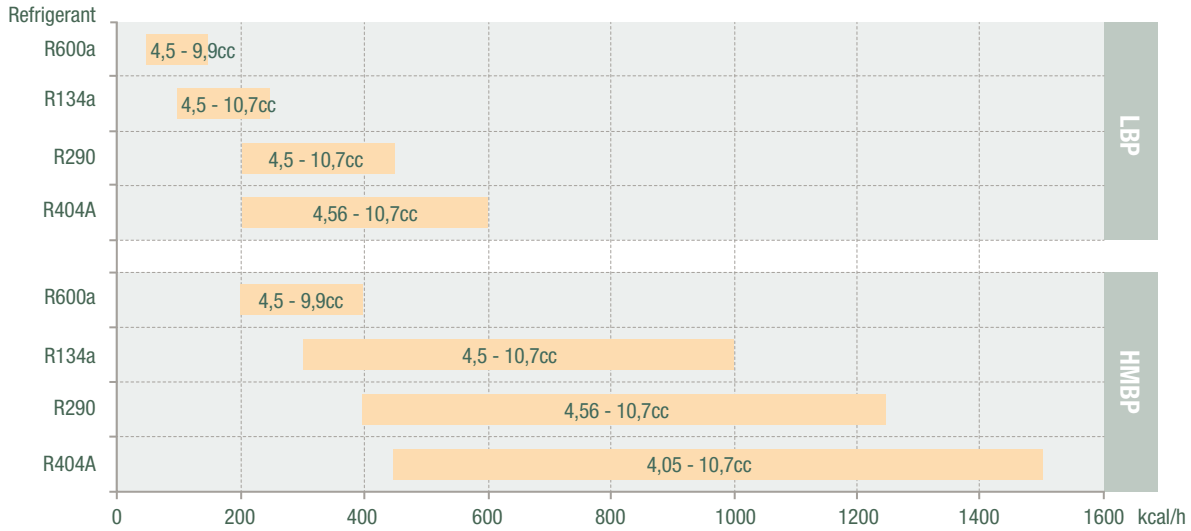

Compressors Ranges P

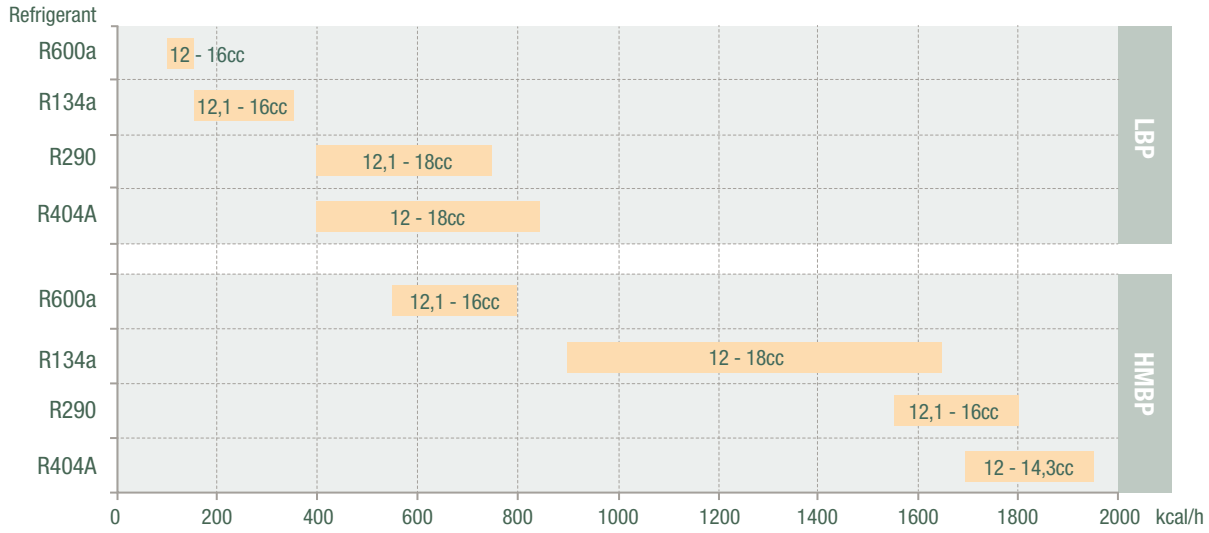

Compressors Ranges X

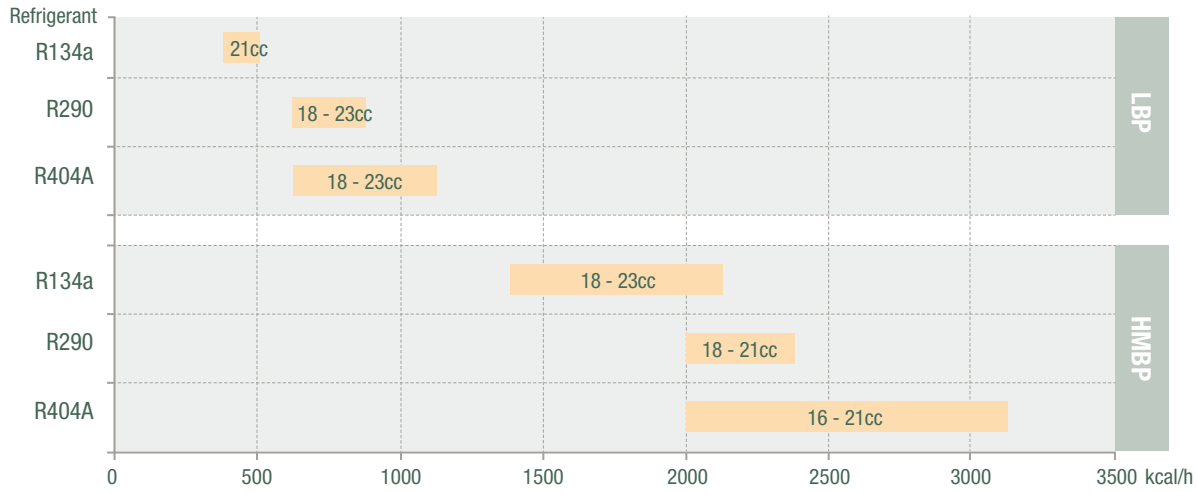

Compressors Ranges S

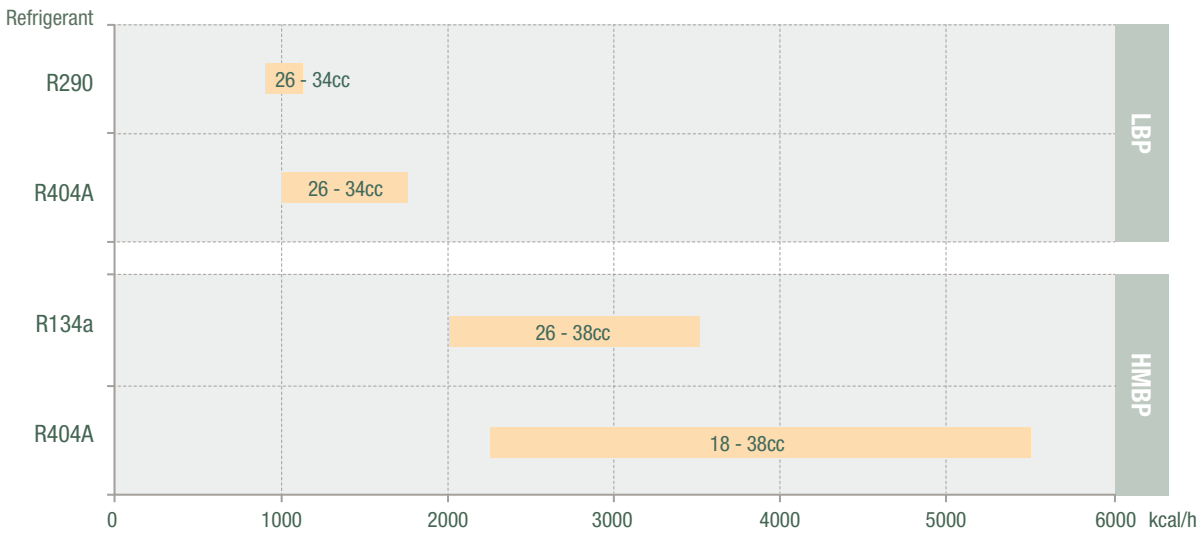

Compressors Ranges LBP

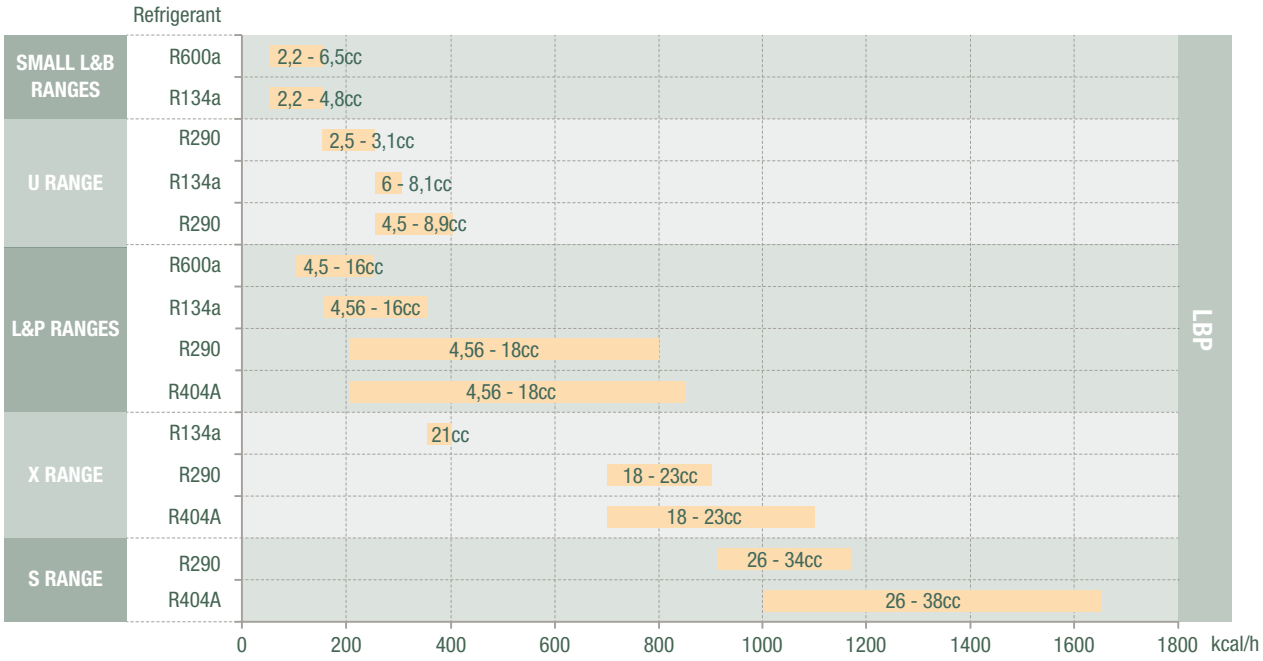

Compressors Ranges HMBP

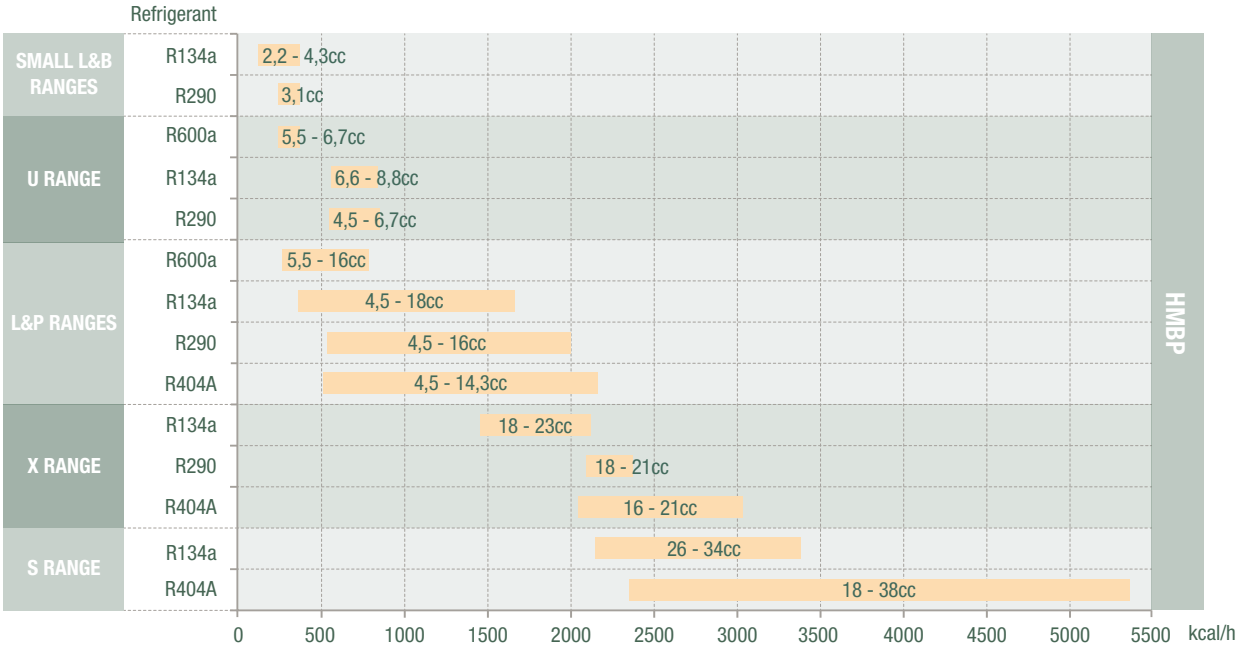

Labels and Approvals

For U, L, P, X, S

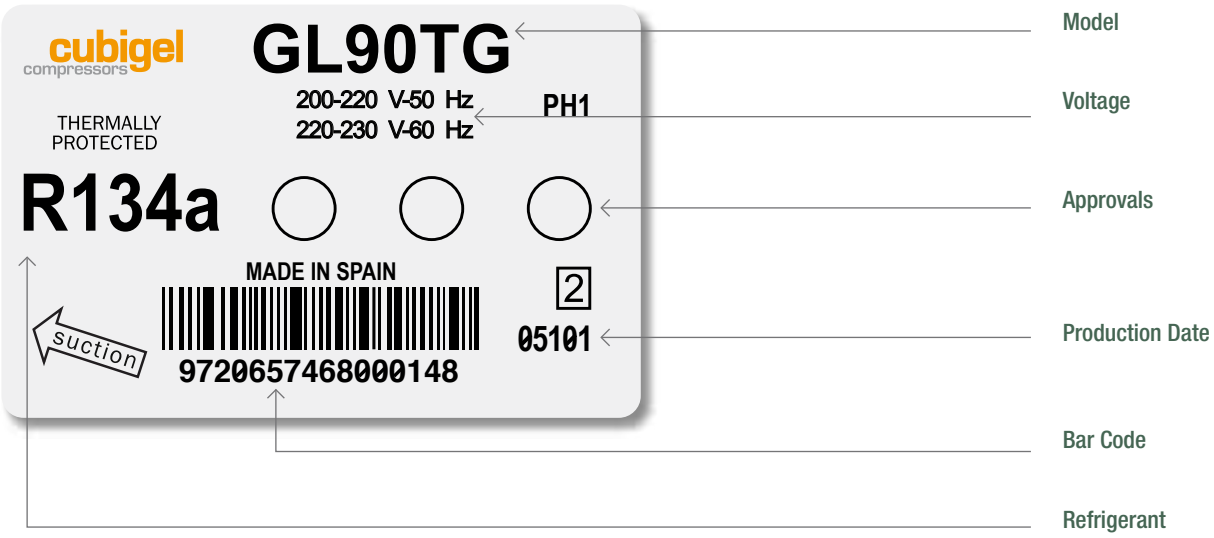

For Small L & B

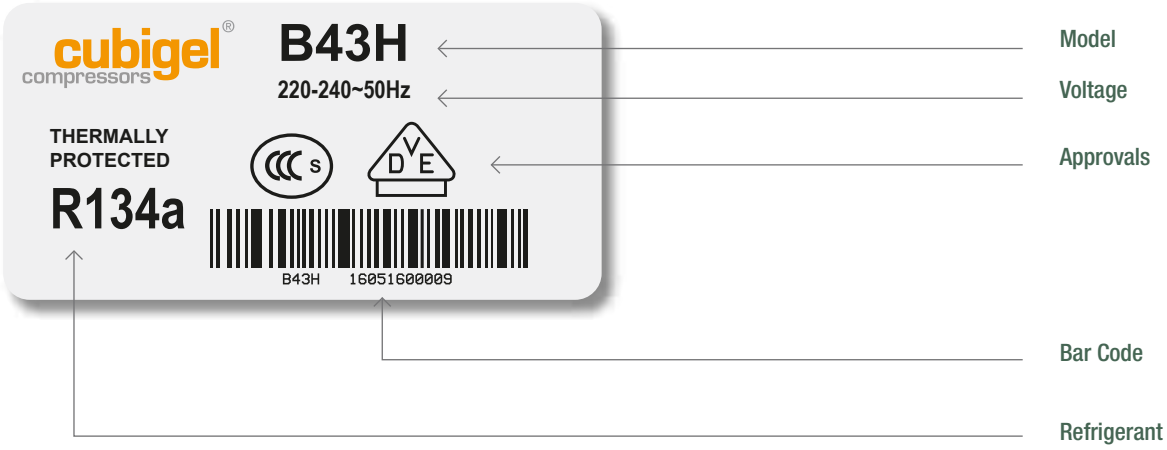

Approvals

Directive compliance declarations

Flammable gases

Nomenclature U, L, P, X and S Ranges

model

G	L	Y	60	R	A	a

Indicates refrigerant.
G = R134a **N** = R290
M = R404A/R507 **H** = R600a

Indicates compressor range (overall design).
L = 4.5 - 10.7cm^3 **X** = 16.0 - 23.0cm^3
U = 4.5 - 8.9cm^3 **P** = 12.0 - 18.0cm^3 **S** = 18.0 - 38.0cm^3

Indicates energy efficiency level. Not appearing in case of Standard efficiency.
Blank = Standard Efficiency
C = Enhance Efficiency
M = Medium
Y = High Efficiency - Run Capacitor Optional RSIR/RSCR or CSIR/CSR
T = Top Efficiency - Run Capacitor RSCR or CSR
S = Super Efficiency - Run Capacitor Optional RSIR/RSCR or CSIR/CSR

Indicates approximate compressor displacement under the following rule:
U / L ranges 10 times the approx. displacement in cm^3/rev (GL90TB -> approx 9 cm^3/rev)
P / X / S ranges The approx. displacement in cm^3/rev (MX21TG -> approx 21 cm^3/rev)

Indicates the starting torque, application type and compressor cooling:
A = LBP - LST - S
C = LBP - LST - FAN
D = LBP - HST - S
F = LBP - HST -FAN
L = LBP - HST - Fan (Current Relay)
M = HMBP - LST/HST - S/FAN
N = LMBP - LST/HST - S/FAN
P = HMBP - LST - FAN
R = HMBP - HST - FAN (CSR versions with Current Relay)
T = HMBP - HST - FAN (CSR versions with Potential Relay)

Indicates the rated voltage:
A = 220-240V 50Hz
B = 220-240V 50Hz (standard efficiency)
C = 100V 50/60Hz (standard efficiency)
D = 115V 60Hz
E = 115V 60Hz (standard efficiency)
F = 208-230V 60Hz
G = 200-220V 50Hz / 220-230V 60Hz
J = 100V 50/60Hz
N = 200-220V 50Hz or 200-240V 50Hz / 220-230V 60Hz
R = 115-127V 60Hz
3 = 3 phase 400-440V 50/60Hz

Indicates a variant of the model that only affects the configuration of electrical components. Its meaning may vary from model to model. It does not appear on the compressor label but it is used for ordering, invoicing and HCB internal processes.

Examples:

1. In high-efficiency compressors ("Y" series, i.e.: GPY12LA or MLY80RD), the letters "a" or "b" may indicate the type of electrical connection corresponding to the electrical accessories supplied with the compressor.

a = no use of running capacitor
b = use of running capacitor

2. In X range it indicates the electrical accessories corresponding to the following situations:

a = Current relay + NTC (no external connecting box).

Nomenclature Small L & B Ranges

model

B	35	C	5	B

Range:
L --> Small L range
B --> B range

Displacement x10:
22 - 2.2cc
25 - 2.5cc
30 - 3.0cc

Refrigerant & application:
H = R134a LBP
G = R134a HBP
C = R600a LBP
M = R600a HBP

Voltage & Frequency:
Blank = 220-240V 50Hz and 220-240V 60 Hz
0 = 100V 50/60Hz
5 = 115V 60Hz
7 = 127V 60Hz

Efficiency level:
Blank = Standard Efficiency
B = High Efficiency
A = Very High Efficiency
S = Top efficiency

model

N	B	C	30	R	A

R290 Models

Range:
L --> Small L range
B --> B range

C --> Without Running Capacitor
G --> With Running Capacitor

Displacement x10:
22 - 2.2cc
25 - 2.5cc
30 - 3.0cc

Refrigerant & application:
For R290 (Propane) Models:
C = LBP – LST – Static
N = LMBP – HST – Static / Fan
R = HMBP – HST - Fan

Voltage & Frequency:
A = 220-240V 50Hz
R = 115-127V 60Hz

SOA - Safe Operating Area

In order to grant the compressor reliability it is recommended that the point representing the operating conditions (suction and discharge pressures) falls within the shadowed area of the corresponding graph.

For Small L and B ranges:

SOA R134a LBP

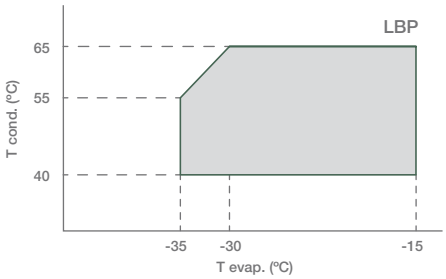

SOA R134a HBP

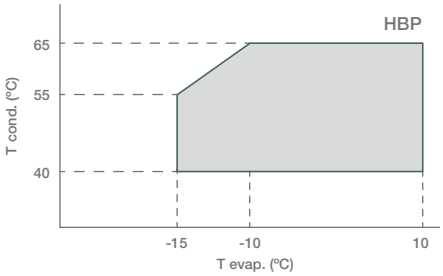

SOA R600a LBP

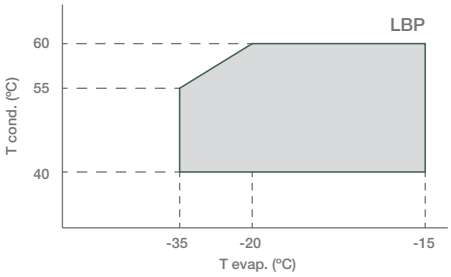

SOA R290 LBP

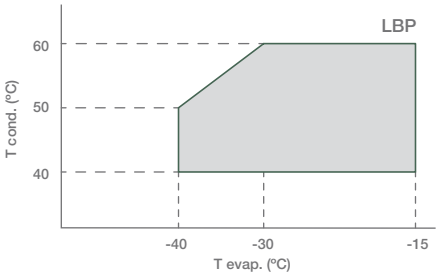

SOA R290 LMBP

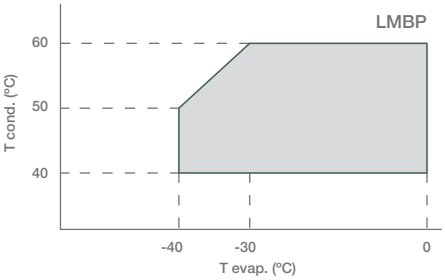

SOA R290 HMBP

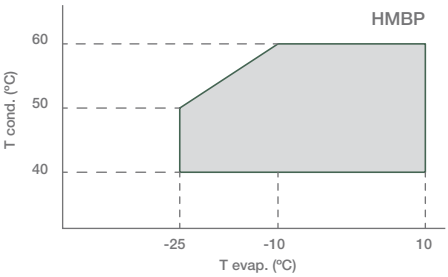

For U, L, P, X and S ranges:

SOA R134a LBP

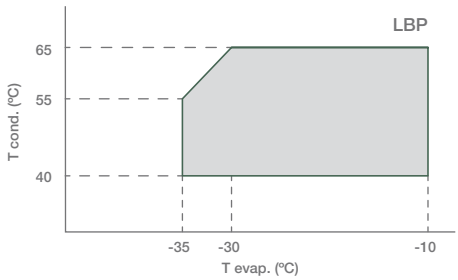

SOA R134a LMBP

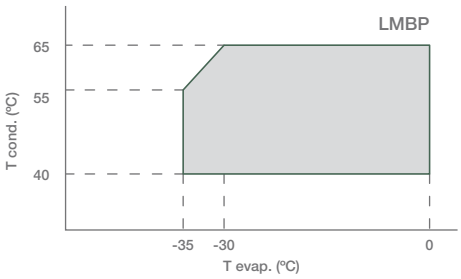

SOA R134a HMBP

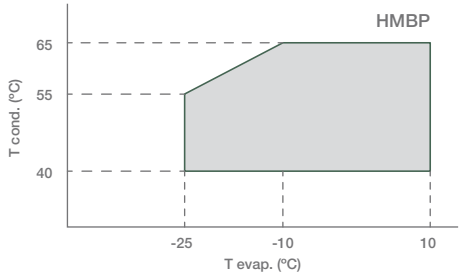

SOA R134a HBP

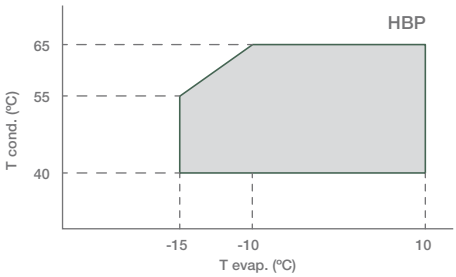

SOA R404A LBP

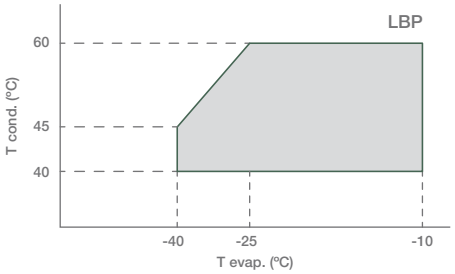

SOA R404A HMBP

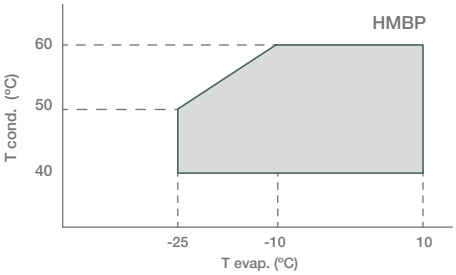

SOA R404A HBP

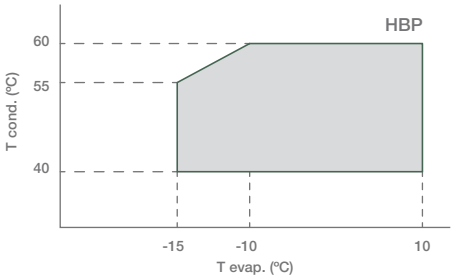

SOA R290 LBP

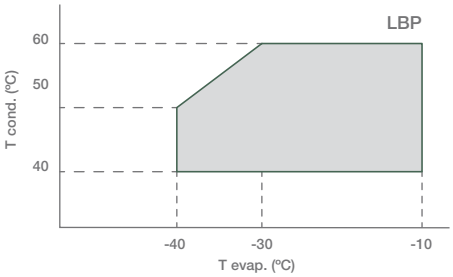

SOA R290 LMBP

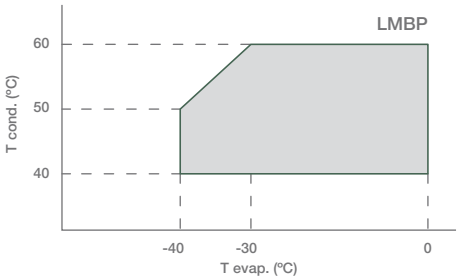

SOA R290 HMBP

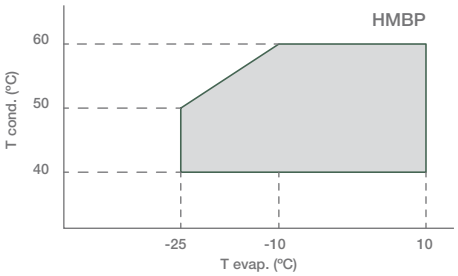

SOA R290 HBP

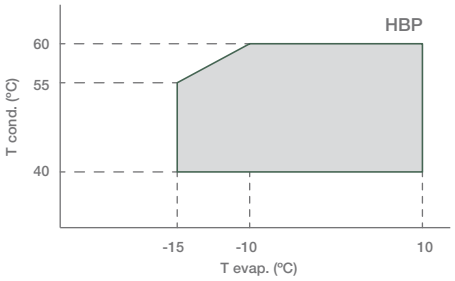

SOA R600a LBP

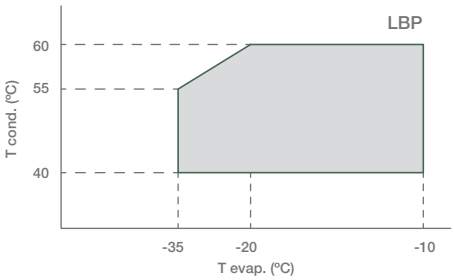

SOA R600a HMBP

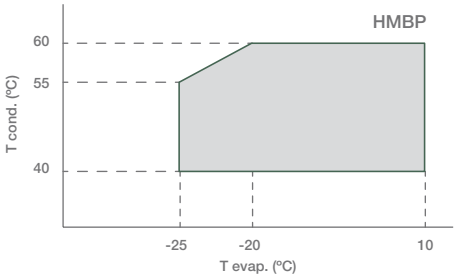

SOA R600a HBP

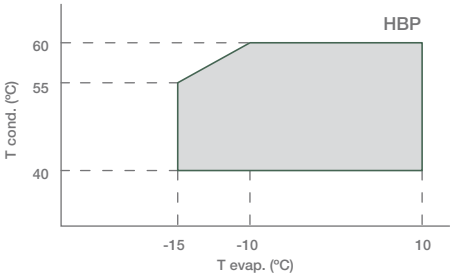

Voltage

The standards consider the voltage variation of the network to be within +/- 6% of its rated value, nevertheless the Cubigel Compressors® motors' design is able to work within -15% of the lowest rating and +10% of the highest rating.

Compressor Voltage Versions for U, L, P, X, S Ranges

Voltage version	Compressor rating	Voltage operative range
A or B	220-240 V 50 Hz	187-264 V 50 Hz
D or E	115 V 60 Hz	98-127 V 60 Hz
F	208-230 V 60 Hz	177-253 V 60 Hz
G or N	200-220/220-230 V 50/60 Hz	170-242/187-253 V 50/60 Hz
J	100 V 50/60 Hz	85-110 V 50/60 Hz
R	115-127V 60Hz	98-140V 60Hz
3	400/440 V 50/60 Hz 3ph	340-440/374-484 V 50/60 Hz

Types of Electrical Motors

RSIR (Resistance Start-Induction Run)
LST motor. No capacitors. Auxiliary winding is disconnected after start up. Standard energy efficiency.

CSIR (Capacitor Start-Induction Run)
HST motor. With starting capacitor.
Auxiliary winding is disconnected after start up. Standard efficiency.

RSCR (Resistance Start-Capacitor Run)
LST motor. With running capacitor. Auxiliary winding remains connected after start up.
Used for high efficiency in small capacity compressors (particularly in household refrigeration)

CSR (Capacitor Start and Run)
HST motor. Two capacitors (starting and running).
Auxiliary winding remains connected after start up.
Used for high efficiency in small compressors and for size reduced size motors in compressors with comparatively large displacements.

Single phase motor classification

Capacitor type	HST With starting capacitor		LST Without starting capacitor	
With Running capacitor	Motor type: **CSR**	Starting device: Current relay + NTC for L & P ranges Potential relay for P, X & S ranges	Motor type: **RSCR**	Starting device: **PTC**
Without Running capacitor	Motor type: **CSIR**	Starting device: Current Relay	Motor type: **RSIR**	Starting device: **Current Relay or PTC**

Type of starting device

Current relay – (electromechanical). RSIR/CSIR motors and CSR low/medium-power motors with NTC (the NTC is connected in series with the starting capacitor and the main propose is to reduce the current peaks in the relay contacts)

Potential relay – (electromechanical). CSR high-power motors.

PTC – (Positive Temperature Coefficient), the resistance increases with the temperature. Device only with RSIR or RSCR motors in the Small L, B, L and P ranges.

NTC – (Negative Temperature Coefficient), the resistance decreases with the temperature. Used in some CSR in order to reduce dimensions and components.

Type of torque

LST – Low Starting Torque – Systems with capillary tube or balanced pressures at start up.

HST – High Starting Torque – Systems with expansion valve or capillary tube, with unbalanced pressures at start up.

How to read this Catalogue

Compressors

Grouped by Refrigerant type | Grouped by Application Type | Grouped by Frequency | Voltage | Performance CECOMAF & ASHRAE | Operative range of evaporating temp | Dimensional drawing reference

R404A (*) HMBP | HBP • 50 Hz

Indicates Green Cooling models

Indicates New models

MODEL	DISPLACEMENT cm³	POWER hp	APPLICATION	CPR COOLING	VOLTAGE FREQUENCY	MOTOR	STARTING	EXPANSION	REFRIGERATION CAPACITY COP in W/W 1 W = 0,864 kcal/h = 3,415 BTU/h Evaporating Temperature °C							WEIGHT Kg	DESIGN
									Cecomaf (W)					Ashrae			
									-25	-15	5 W	5 COP	10	7.2 kcal/h	7.2 COP		
ML40TB	4.05	1/6	HMBP	F	220-240V 50Hz ~1	CSIR	R	C-V	133	214	**473**	**1.43**	558	**510**	**1.74**	10.0	Lc
ML40TG	4.05	1/6	HMBP	F	200-240/220-230V 50/60Hz ~1	CSIR	R	C-V	133	214	**473**	**1.43**	558	**510**	**1.74**	10.0	Lc
ML45TB	4.50	1/5	HMBP	F	220-240V 50Hz ~1	CSIR	R	C-V	151	238	**528**	**1.49**	624	**570**	**1.82**	10.1	Lc
ML45TG	4.50	1/5	HMBP	F	200-240/220-230V 50/60Hz ~1	CSIR	R	C-V	151	238	**528**	**1.49**	624	**570**	**1.82**	10.0	Lc
MLY60RAa	5.98	1/4	HMBP	F	220-240V 50Hz ~1	CSIR	R	C-V	212	346	**766**	**1.77**	902	**825**	**2.15**	10.5	Lc
MLY60RAb	5.98	1/4	HMBP	F	220-240V 50Hz ~1	CSR	R	C-V	212	346	**766**	**1.93**	902	**825**	**2.36**	10.5	Lc
ML60TB	5.68	1/4	HMBP	F	220-240V 50Hz ~1	CSIR	R	C-V	166	277	**647**	**1.53**	769	**700**	**1.85**	10.1	Lc
ML60TG	5.68	1/4	HMBP	F	200-220/230V 50/60Hz ~1	CSIR	R	C-V	166	277	**647**	**1.53**	769	**700**	**1.85**	10.0	Lc
MLY80RAa	8.10	3/8	HMBP	F	220-240V 50Hz ~1	CSIR	R	C-V	282	463	**1055**	**1.86**	1250	**1140**	**2.27**	10.2	Ld
MLY80RAb	8.10	3/8	HMBP	F	220-240V 50Hz ~1	CSR	R	C-V	282	463	**1055**	**2.02**	1250	**1140**	**2.46**	10.2	Ld
ML80TB	7.57	3/8	HMBP	F	220-240V 50Hz ~1	CSIR	R	C-V	227	385	**880**	**1.63**	1040	**950**	**1.99**	11.4	Ld
ML80TG	7.57	3/8	HMBP	F	200-240/220-230V 50/60Hz ~1	CSIR	R	C-V	227	385	**880**	**1.63**	1040	**950**	**1.99**	11.2	Ld
MLY90RAa	9.09	3/8	HMBP	F	220-240V 50Hz ~1	CSIR	R	C-V	317	512	**1132**	**1.75**	1334	**1220**	**2.13**	11.3	Ld
MLY90RAb	9.09	3/8	HMBP	F	220-240V 50Hz ~1	CSR	R	C-V	317	511	**1136**	**1.92**	1340	**1225**	**2.34**	11.3	Ld
ML90TB	8.86	3/8	HMBP	F	220-240V 50Hz ~1	CSIR	R	C-V	282	463	**1055**	**1.63**	1250	**1140**	**1.98**	11.6	Ld
ML90TG	8.86	3/8	HMBP	F	200-220/230V 50/60Hz ~1	CSIR	R	C-V	282	463	**1055**	**1.63**	1250	**1140**	**1.98**	12.7	Ld
MP12TG	12.05	1/2	HMBP	F	200-220/220-230V 50/60Hz ~1	CSR	R	C-V	373	634	**1463**	**1.85**	1732	**1580**	**2.25**	13.5	Pd
MPT12RA	12.10	3/8	HMBP	F	220-240V 50Hz ~1	CSR	R	C-V	398	676	**1560**	**1.93**	1845	**1685**	**2.35**	12.6	Pd
MPT14RA	14,32	1/2	HMBP	F	220-240V 50Hz ~1	CSR	R	C-V	478	784	**1760**	**1,81**	2078	**1900**	**2.20**	13.5	Pd
MX16TBa	16.03	3/4	HMBP	F	220-240V 50Hz ~1	CSR	R	C-V	484	818	**1880**	**1.76**	2225	**2030**	**2.15**	16.2	Xc
MX18TBa	18.40	7/8	HMBP	F	220-240V 50Hz ~1	CSR	R	C-V	554	937	**2157**	**1.78**	2554	**2330**	**2.18**	16.0	Xd
MX18TG	18.40	7/8	HMBP	F	200-220/220-230V 50/60Hz ~1	CSR	R	C-V	554	937	**2157**	**1.78**	2554	**2330**	**2.18**	17.0	Xd
MX21TBa	20.73	2	HMBP	F	220-240V 50Hz ~1	CSR	R	C-V	625	1052	**2425**	**1.78**	2873	**2620**	**2.16**	17.5	Xd
MX21TG	20.72	1	HMBP	F	200-220/230V 50/60Hz ~1	CSR	R	C-V	625	1052	**2425**	**1.77**	2873	**2620**	**2.15**	17.6	Xd
MS18T3	18.10	7/8	HMBP	F	400/440V 50/60Hz ~3	3PHASE	R	C-V	423	838	**2137**	**1.92**	2557	**2320**	**2.35**	20.0	Sb
MS22TB	21.75	1	HMBP	F	220-240V 50Hz ~1	CSR	R	C-V	453	972	**2566**	**2.04**	3077	**2789**	**2.50**	20.5	Sc
MS22T3	21.75	1	HMBP	F	400/440V 50/60Hz ~3	3PHASE	R	C-V	453	975	**2576**	**2.01**	3090	**2800**	**2.45**	20.0	Sb
MS26TB	25.93	1 3/8	HMBP	F	220-240V 50Hz ~1	CSR	R	C-V	675	1295	**3185**	**2.02**	3789	**3449**	**2.46**	23.0	Sd
MS26TG	25.93	1 3/8	HMBP	F	200-220/230V 50/60Hz ~1	CSR	R	C-V	675	1295	**3186**	**2.02**	3791	**3451**	**2.46**	23.0	Sd
MS26T3	25.93	1 3/8	HMBP	F	400/440V 50/60Hz ~3	3PHASE	R	C-V	675	1295	**3186**	**2.01**	3791	**3451**	**2.45**	18.6	Sd
MS34TB	34.42	1 5/8	HBP	F	220-240V 50Hz ~1	CSR	R	C-V	-	1860	**4231**	**1.92**	4959	**4551**	**2.30**	22.7	Sd
MS34T3	34.42	1 5/8	HMBP	F	400/440V 50/60Hz ~3	3PHASE	R	C-V	1007	1860	**4231**	**1.82**	4958	**4551**	**2.20**	22.8	Sd
MS34TG	34.42	1 5/8	HMBP	F	200-220/230V 50/60Hz ~1	CSR	R	C-V	1012	1860	**4231**	**1.92**	4959	**4551**	**2.30**	22.7	Sd

3.

Compressors Catalogue

R290/R600a

R290 LBP | LMBP • 50 Hz

Natural Refrigerant

MODEL	DISPLACEMENT	POWER	APPLICATION	CPR COOLING	VOLTAGE FREQUENCY	MOTOR	STARTING	EXPANSION	REFRIGERATION CAPACITY COP in W/W 1 W = 0,864 kcal/h = 3,415 BTU/h Evaporating Temperature ºC							WEIGHT	DESIGN
											Cecomaf (W)			Ashrae			
									-40	-30	-25		-10	-23.3			
	cm³	hp									W	COP		W	COP	Kg	
NBC25CA (**)	2.60	1/12	LBP	S	220-240V 50Hz ~1	RSIR	R	C	32	57	**74**	**1.00**	143	**100**	**1.30**	5.90	Bf
NBG25CA (**)	2.60	1/12	LBP	S	220-240V 50Hz ~1	RSCR	R	C	32	57	**74**	**1.17**	143	**100**	**1.52**	6.00	Bf
NBC35NA	3.50	1/8	LBP	S	220-240V 50Hz ~1	RSIR	R	C	40	79	**106**	**1.04**	211	**143**	**1.35**	6.10	Bf
NBG35CA (**)	3.50	1/8	LBP	S	220-240V 50Hz ~1	RSCR	R	C	47	83	**108**	**1.20**	209	**145**	**1.55**	6.20	Bf
NBC41NA	4.10	1/7	LMBP	S	220-240V 50Hz ~1	RSIR	R	C	58	103	**134**	**1.00**	259	**180**	**1.30**	5.90	Bf
NBG41CA (**)	4.10	1/7	LBP	S	220-240V 50Hz ~1	RSCR	R	C	58	103	**134**	**1.20**	259	**181**	**1.55**	6.00	Bf
NBC45CA (**)	4.50	1/6	LBP	S	220-240V 50Hz ~1	RSIR	R	C	65	115	**150**	**1.00**	290	**201**	**1.30**	5.90	Bf
NBG45CA (**)	4.50	1/6	LBP	S	220-240V 50Hz ~1	RSCR	R	C	65	115	**150**	**1.16**	290	**201**	**1.50**	6.00	Bf
NUY45LAa	4.50	1/5	LBP	F	220-240V 50Hz ~1	CSIR	R	C-V	65	122	**159**	**1.21**	306	**214**	**1.57**	9.30	Ub
NUY45LAb	4.50	1/5	LBP	F	220-240V 50Hz ~1	CSR	R	C-V	66	123	**161**	**1.26**	311	**216**	**1.64**	9.45	Ub
NUS45NAa (**)	4.50	1/5	LMBP	F	220-240V 50Hz ~1	RSIR	P	C	69	129	**169**	**1.35**	326	**227**	**1.76**	9.30	Ub
NUS45NAb (**)	4.50	1/5	LMBP	F	220-240V 50Hz ~1	RSCR	P	C	69	129	**169**	**1.44**	326	**227**	**1.88**	9.45	Ub
NUS45NAc (**)	4.50	1/5	LMBP	F	220-240V 50Hz ~1	CSIR	R	C-V	69	129	**169**	**1.35**	326	**227**	**1.76**	9.30	Ub
NUC45NGa	4.50	1/5	LMBP	F	200-220/230V 50/60Hz~1	RSIR	P	C	68	120	**157**	**1.05**	304	**210**	**1.35**	8.60	Ub
NUM55CAa	5.50	1/5	LBP	S/F	220-240V 50Hz ~1	RSIR	P	C	79	147	**193**	**1.11**	373	**260**	**1.45**	8.30	Ub
NUM55CAb	5.50	1/5	LMBP	S/F	220-240V 50Hz ~1	RSCR	P	C	79	147	**193**	**1.19**	373	**260**	**1.55**	8.30	Ub
NUM55CAc	5.50	1/5	LBP	S/F	220-240V 50Hz ~1	CSIR	R	C-V	79	147	**193**	**1.11**	373	**260**	**1.45**	8.30	Ub
NUM55CAd	5.50	1/5	LMBP	S/F	220-240V 50Hz ~1	CSR	R	C-V	79	147	**193**	**1.19**	373	**260**	**1.55**	8.30	Ub
NUS55CAa (**)	5.50	1/5	LMBP	F	220-240V 50Hz ~1	RSIR	P	C	79	147	**193**	**1.37**	373	**260**	**1.78**	9.10	Ub
NUS55CAb (**)	5.50	1/5	LMBP	F	220-240V 50Hz ~1	RSCR	P	C	79	147	**193**	**1.46**	373	**260**	**1.90**	9.21	Ub
NUS55CAc (**)	5.50	1/5	LMBP	F	220-240V 50Hz ~1	CSIR	R	C-V	79	147	**193**	**1.37**	373	**260**	**1.78**	9.10	Ub
NUT55CAa	5.50	1/5	LBP	F	220-240V 50Hz ~1	RSIR	P	C	88	152	**196**	**1.27**	382	**264**	**1.64**	9.10	Ub
NUT55CAb	5.50	1/5	LBP	F	220-240V 50Hz ~1	RSCR	P	C	88	152	**196**	**1.39**	382	**264**	**1.80**	9.21	Ub
NUT55CAc	5.50	1/5	LBP	S	220-240V 50Hz ~1	RSIR	P	C	88	152	**196**	**1.27**	382	**264**	**1.64**	9.10	Ub
NUT55CAd	5.50	1/5	LBP	S	220-240V 50Hz ~1	RSCR	P	C	88	152	**196**	**1.39**	382	**264**	**1.80**	9.21	Ub
NUC55NGa	5.50	1/5	LMBP	F	200-220/230V 50/60Hz~1	RSIR	P	C	89	154	**198**	**1.04**	386	**265**	**1.35**	8.60	Ub
NUC55NGc	5.50	1/5	LMBP	F	200-220/230V 50/60Hz~1	CSIR	R	C-V	89	154	**198**	**1.04**	386	**265**	**1.35**	8.60	Ub
NUM60CAa	6.00	1/4	LBP	S/F	220-240V 50Hz ~1	RSIR	P	C	98	170	**219**	**1.11**	427	**295**	**1.45**	8.30	Ub
NUM60CAb	6.00	1/4	LMBP	S/F	220-240V 50Hz ~1	RSCR	P	C	98	170	**219**	**1.19**	427	**295**	**1.55**	8.30	Ub
NUM60CAc	6.00	1/4	LBP	S/F	220-240V 50Hz ~1	CSIR	R	C-V	98	170	**219**	**1.11**	427	**295**	**1.45**	8.30	Ub
NUM60CAd	6.00	1/4	LMBP	S/F	220-240V 50Hz ~1	CSR	R	C-V	98	170	**219**	**1.19**	427	**295**	**1.55**	8.30	Ub
NUS60NAa (**)	6.00	1/4	LMBP	F	220-240V 50Hz ~1	RSIR	P	C	98	170	**219**	**1.37**	427	**295**	**1.78**	9.20	Ub
NUS60NAb (**)	6.00	1/4	LMBP	F	220-240V 50Hz ~1	RSCR	P	C	98	170	**219**	**1.46**	427	**295**	**1.90**	9.31	Ub
NUS60NAc (**)	6.00	1/4	LMBP	F	220-240V 50Hz ~1	CSIR	R	C-V	98	170	**219**	**1.37**	427	**295**	**1.78**	9.20	Ub
NUT60CAa	6.00	1/4	LBP	F	220-240V 50Hz ~1	RSIR	P	C	101	175	**226**	**1.30**	431	**304**	**1.68**	9.20	Ub
NUT60CAb	6.00	1/4	LBP	F	220-240V 50Hz ~1	RSCR	P	C	101	175	**226**	**1.41**	431	**304**	**1.82**	9.31	Ub
NUT60CAc	6.00	1/4	LBP	S	220-240V 50Hz ~1	RSIR	P	C	101	175	**226**	**1.30**	431	**304**	**1.68**	9.20	Ub
NUT60CAd	6.00	1/4	LBP	S	220-240V 50Hz ~1	RSCR	P	C	101	175	**226**	**1.41**	431	**304**	**1.82**	9.31	Ub
NUY60LAa	6.00	1/4	LBP	F	220-240V 50Hz ~1	CSIR	R	C-V	91	168	**217**	**1.24**	405	**291**	**1.60**	9.40	Ub
NUY60LAb	6.00	1/4	LBP	F	220-240V 50Hz ~1	CSR	R	C-V	92	167	**216**	**1.29**	414	**291**	**1.67**	9.50	Ub
NUM70CAa	6.70	1/4	LBP	F	220-240V 50Hz ~1	RSIR	P	C	103	186	**241**	**1.11**	462	**325**	**1.45**	8.60	Ub
NUM70CAb	6.70	1/4	LMBP	F	220-240V 50Hz ~1	RSCR	P	C	103	186	**241**	**1.19**	462	**325**	**1.55**	8.60	Ub
NUM70CAc	6.70	1/4	LBP	F	220-240V 50Hz ~1	CSIR	R	C-V	103	186	**241**	**1.11**	462	**325**	**1.45**	8.60	Ub
NUM70CAd	6.70	1/4	LMBP	F	220-240V 50Hz ~1	CSR	R	C-V	103	186	**241**	**1.19**	462	**325**	**1.55**	8.60	Ub
NUS70NAa (**)	6.70	1/4	LMBP	F	220-240V 50Hz ~1	RSIR	P	C	103	186	**241**	**1.37**	462	**325**	**1.76**	8.60	Ub
NUS70NAb (**)	6.70	1/4	LMBP	F	220-240V 50Hz ~1	RSCR	P	C	103	186	**241**	**1.46**	462	**325**	**1.88**	8.60	Ub

Green Cooling Models

New Models

(**) Under development

This table continues in the following page

R290 LBP | LMBP • 50 Hz

Natural Refrigerant

MODEL	DISPLACEMENT cm³	POWER hp	APPLICATION	CPR COOLING	VOLTAGE FREQUENCY	MOTOR	STARTING	EXPANSION	REFRIGERATION CAPACITY COP in W/W 1 W = 0,864 kcal/h = 3,415 BTU/h Evaporating Temperature ºC							WEIGHT Kg	DESIGN
									Cecomaf (W)					Ashrae			
									-40	-30	-25 W	-25 COP	-10	-23.3 W	-23.3 COP		
NUS70NAc (**)	6.70	1/4	LMBP	F	220-240V 50Hz ~1	CSIR	R	C-V	103	186	**241**	**1.37**	462	**325**	**1.76**	8.60	Ub
NUT70CAa	6.70	1/4	LBP	F	220-240V 50Hz ~1	RSIR	P	C	109	195	**250**	**1.30**	463	**335**	**1.68**	9.20	Ub
NUT70CAb	6.70	1/4	LBP	F	220-240V 50Hz ~1	RSCR	P	C	109	195	**250**	**1.39**	463	**335**	**1.80**	9.41	Ub
NUT70CAc	6.70	1/4	LBP	S	220-240V 50Hz ~1	RSIR	P	C	109	195	**250**	**1.30**	463	**335**	**1.68**	9.20	Ub
NUT70CAd	6.70	1/4	LBP	S	220-240V 50Hz ~1	RSCR	P	C	109	195	**250**	**1.39**	463	**335**	**1.80**	9.41	Ub
NUC70NGa	6.70	1/4	LMBP	F	200-220/230V 50/60Hz~1	RSIR	P	C	106	190	**243**	**1.04**	450	**325**	**1.35**	8.80	Ub
NUY70NGa (**)	6.70	1/4	LMBP	F	200-220/220-230V 50/60Hz~1	CSIR	R	C-V	109	195	**250**	**1.39**	463	**335**	**1.40**	8.95	Uc
NUY80LAa	8.10	1/3	LBP	F	220-240V 50Hz ~1	CSIR	R	C-V	129	230	**294**	**1.16**	540	**393**	**1.49**	9.43	Uc
NLY90CAa	9.09	1/3	LBP	F	220-240V 50Hz ~1	RSIR	P	C	130	236	**307**	**1.06**	591	**413**	**1.37**	10.30	Ld
NLY90CAb	9.09	1/3	LBP	F	220-240V 50Hz ~1	RSCR	P	C	130	236	**307**	**1.11**	591	**413**	**1.44**	10.30	Ld
NUY90CAa	8.90	1/3	LBP	F	220-240V 50Hz ~1	RSIR	P	C	157	267	**338**	**1.21**	614	**451**	**1.55**	9.30	Uc
NUY90CAb	8.90	1/3	LBP	F	220-240V 50Hz ~1	RSCR	P	C	158	270	**342**	**1.28**	625	**457**	**1.64**	9.40	Uc
NUY90LAa	8.90	3/8	LBP	F	220-240V 50Hz ~1	CSIR	R	C-V	157	267	**338**	**1.21**	614	**451**	**1.55**	9.40	Uc
NUY90LAb	8.90	3/8	LBP	F	220-240V 50Hz ~1	CSR	R	C-V	158	270	**342**	**1.28**	625	**457**	**1.64**	9.50	Uc
NLY12LAa	10.70	3/8	LBP	F	220-240V 50Hz ~1	CSIR	R	C-V	163	283	**364**	**0.96**	689	**488**	**1.24**	11.21	Ld
NLY12LAb	10.70	3/8	LBP	F	220-240V 50Hz ~1	CSR	R	C-V	163	283	**364**	**1.01**	689	**488**	**1.31**	11.31	Ld
NLY12NGa	10.70	3/8	LMBP	F	200-220/220-230V 50/60Hz~1	CSIR	R	C-V	168	288	**371**	**0.98**	715	**499**	**1.28**	11.04	Ld
NLY12NGb	10.70	3/8	LMBP	F	200-220/220-230V 50/60Hz~1	CSR	R	C-V	171	287	**371**	**1.06**	726	**499**	**1.31**	11.14	Ld
NPY12LAa	12.10	3/8	LBP	F	220-240V 50Hz ~1	CSIR	R	C-V	174	309	**402**	**1.05**	783	**541**	**1.35**	12.13	Pd
NPY12LAb	12.10	3/8	LBP	F	220-240V 50Hz ~1	CSR	R	C-V	174	309	**402**	**1.15**	783	**541**	**1.49**	12.23	Pd
NPY14LAa	14.32	1/2	LBP	F	220-240V 50Hz ~1	CSIR	R	C-V	217	376	**485**	**1.05**	928	**651**	**1.35**	12.17	Pd
NPY14LAb	14.32	1/2	LBP	F	220-240V 50Hz ~1	CSR	R	C-V	217	376	**485**	**1.14**	928	**651**	**1.48**	12.27	Pd
NPT16LA	16.15	1/2	LBP	F	220-240V 50Hz ~1	CSR	R	C-V	254	440	**564**	**1.16**	1062	**756**	**1.50**	12.17	Pd
NPT18LA	18.00	1/2	LBP	F	220-240V 50Hz ~1	CSR	R	C-V	269	473	**611**	**1.13**	1165	**820**	**1.46**	12.30	Pd
NX18FBa	18.40	3/4	LBP	F	220-240V 50Hz ~1	CSR	R	C-V	243	471	**611**	**1.11**	1137	**820**	**1.44**	16.41	Xd
NX21FBa	20.72	3/4	LBP	F	220-240V 50Hz ~1	CSR	R	C-V	267	517	**675**	**1.11**	1275	**907**	**1.44**	16.00	Xd
NX23FBa	23.20	7/8	LBP	F	220-240V 50Hz ~1	CSR	R	C-V	297	572	**746**	**1.09**	1411	**1003**	**1.41**	16.75	Xd
NS26FB (**)	25.93	7/8	LBP	F	220-240V 50Hz ~1	CSR	R	C-V	199	580	**765**	**1.04**	1448	**1029**	**1.35**	22.60	Sd
NS34FB (**)	34.42	1	LBP	F	220-240V 50Hz ~1	CSR	R	C-V	257	750	**990**	**1.04**	1873	**1332**	**1.35**	23.00	Sd

R290 LBP | LMBP • 60 Hz

Natural Refrigerant

MODEL	DISPLACEMENT cm³	POWER hp	APPLICATION	CPR COOLING	VOLTAGE FREQUENCY	MOTOR	STARTING	EXPANSION	REFRIGERATION CAPACITY COP in W/W 1 W = 0,864 kcal/h = 3,415 BTU/h Evaporating Temperature ºC							WEIGHT Kg	DESIGN
									Cecomaf (W)					Ashrae			
									-40	-30	-25 W	-25 COP	-10	-23.3 W	-23.3 COP		
NBC30NR	3.10	1/7	LMBP	S/F	115-127V 60Hz ~1	CSIR	R	C-V	50	89	**118**	**1.07**	242	**159**	**1.40**	6.10	Bf
NUY45NRa	4.50	1/5	LMBP	F	115-127V 60Hz ~1	CSIR	R	C-V	76	136	**180**	**1.15**	363	**243**	**1.50**	9.12	Ub
NUY45NRb	4.50	1/5	LMBP	F	115-127V 60Hz ~1	CSR	R	C-V	73	137	**182**	**1.23**	369	**247**	**1.60**	9.19	Ub
NUC45NGa	4.50	1/5	LMBP	F	200-220/230V 50/60Hz ~1	RSIR	P	C	72	136	**180**	**1.10**	365	**244**	**1.43**	8.60	Ub
NUT55LRa	5.50	1/5	LBP	F	115-127V 60Hz ~1	CSIR	R	C-V	110	189	**243**	**1.24**	460	**326**	**1.60**	9.47	Ub
NUT55LRb	5.50	1/5	LBP	F	115-127V 60Hz ~1	CSR	R	C-V	110	193	**247**	**1.34**	463	**331**	**1.73**	9.54	Ub
NUT55LRc	5.50	1/5	LBP	S	115-127V 60Hz ~1	CSIR	R	C-V	110	189	**243**	**1.24**	460	**326**	**1.60**	9.47	Ub
NUT55LRd	5.50	1/5	LBP	S	115-127V 60Hz ~1	CSR	R	C-V	110	193	**247**	**1.34**	463	**331**	**1.73**	9.54	Ub

Green Cooling Models

New Models

(**) Under development

This table continues in the following page

R290 LBP | LMBP • 60 Hz

Natural Refrigerant

MODEL	DISPLACEMENT cm³	POWER hp	APPLICATION	CPR COOLING	VOLTAGE FREQUENCY	MOTOR	STARTING	EXPANSION	REFRIGERATION CAPACITY COP in W/W 1 W = 0,864 kcal/h = 3,415 BTU/h Evaporating Temperature ºC							WEIGHT Kg	DESIGN
									Cecomaf (W)					Ashrae			
									-40	-30	-25 W	-25 COP	-10	-23.3 W	-23.3 COP		
NUY55NRa (**)	5.50	1/5	LMBP	F	115-127V 60Hz ~1	CSIR	R	C-V	105	184	**235**	**1.21**	441	**312**	**1.56**	9.10	Ub
NUY55NRc (**)	5.50	1/5	LMBP	S	115-127V 60Hz ~1	CSIR	R	C-V	105	184	**235**	**1.21**	441	**312**	**1.56**	9.10	Ub
NUC55NGa	5.50	1/5	LMBP	F	200-220/230V 50/60Hz ~1	RSIR	P	C	106	186	**237**	**1.15**	445	**314**	**1.48**	8.60	Ub
NUC55NGc	5.50	1/5	LMBP	F	200-220/230V 50/60Hz ~1	CSIR	R	C-V	106	186	**237**	**1.15**	445	**314**	**1.48**	8.60	Ub
NUT60LRa	6.00	1/3	LBP	F	115-127V 60Hz ~1	CSIR	R	C-V	122	207	**266**	**1.25**	508	**357**	**1.60**	9.40	Ub
NUT60LRb	6.00	1/3	LBP	F	115-127V 60Hz ~1	CSR	R	C-V	122	213	**273**	**1.34**	513	**366**	**1.73**	9.50	Ub
NUT60LRc	6.00	1/3	LBP	S	115-127V 60Hz ~1	CSIR	R	C-V	122	207	**266**	**1.24**	508	**357**	**1.60**	9.40	Ub
NUT60LRd	6.00	1/3	LBP	S	115-127V 60Hz ~1	CSR	R	C-V	122	213	**273**	**1.34**	513	**366**	**1.73**	9.50	Ub
NUY60NRa	6.00	1/3	LMBP	F	115-127V 60Hz ~1	CSIR	R	C-V	121	209	**269**	**1.22**	513	**361**	**1.58**	9.55	Uc
NUY60NRc	6.00	1/3	LMBP	S	115-127V 60Hz ~1	CSIR	R	C-V	121	209	**269**	**1.22**	513	**361**	**1.58**	9.55	Uc
NUY70NRa	6.70	1/5	LMBP	F	115-127V 60Hz ~1	CSIR	R	C-V	129	231	**297**	**1.20**	551	**398**	**1.56**	9.40	Uc
NUY70NRc	6.70	1/5	LMBP	S	115-127V 60Hz ~1	CSIR	R	C-V	129	231	**297**	**1.20**	551	**398**	**1.56**	9.40	Uc
NUY70NGa (**)	6.70	1/5	LMBP	F	200-220/220-230V 50/60Hz ~1	CSIR	R	C-V	127	228	**292**	**1.18**	542	**391**	**1.53**	8.95	Uc
NUC70NGa	6.70	1/4	LMBP	F	200-220/230V 50/60Hz ~1	RSIR	P	C	126	226	**290**	**1.21**	538	**388**	**1.57**	8.80	Ub
NUY80NRa (**)	8.10	1/4	LMBP	F	115-127V 60Hz ~1	CSIR	R	C-V	154	272	**356**	**1.21**	703	**479**	**1.56**	9.30	Uc
NUY80NRc (**)	8.10	1/4	LMBP	S	115-127V 60Hz ~1	CSIR	R	C-V	154	272	**356**	**1.21**	703	**479**	**1.56**	9.30	Uc
NUY90NRa	8.90	1/3	LMBP	F	115-127V 60Hz ~1	CSIR	R	C-V	167	300	**391**	**1.21**	767	**528**	**1.55**	9.40	Uc
NUY90NRc	8.90	1/3	LMBP	S	115-127V 60Hz ~1	CSIR	R	C-V	167	300	**391**	**1.21**	767	**528**	**1.55**	9.40	Uc
NLY12NGa	10.70	3/8	LMBP	F	200-220/220-230V 50/60Hz ~1	CSIR	R	C-V	197	339	**439**	**1.09**	848	**590**	**1.41**	11.04	Ld
NLY12NGb	10.70	3/8	LMBP	F	200-220/220-230V 50/60Hz ~1	CSR	R	C-V	207	342	**439**	**1.15**	850	**590**	**1.49**	11.14	Ld
NLY12NRa	10.70	1/3	LMBP	F	115-127V 60Hz ~1	CSIR	R	C-V	188	338	**437**	**1.10**	835	**587**	**1.42**	10.94	Ld
NLY12NRb	10.70	1/3	LMBP	F	115-127V 60Hz ~1	CSR	R	C-V	191	343	**443**	**1.16**	845	**595**	**1.49**	11.04	Ld
NPY12LRa	12.10	3/8	LBP	F	115-127V 60Hz ~1	CSIR	R	C-V	199	362	**473**	**1.04**	927	**637**	**1.35**	11.77	Pd
NPY12LRb	12.10	3/8	LBP	F	115-127V 60Hz ~1	CSR	R	C-V	199	362	**473**	**1.11**	927	**637**	**1.44**	11.87	Pd
NPY14LFa	14.32	1/2	LBP	F	208-230V 60Hz ~1	CSIR	R	C-V	269	466	**603**	**1.04**	1175	**812**	**1.34**	12.19	Pd
NPY14LFb	14.32	1/2	LBP	F	208-230V 60Hz ~1	CSR	R	C-V	269	466	**603**	**1.09**	1175	**812**	**1.42**	12.29	Pd
NPT16LR	16.10	1/2	LBP	F	115-127V 60Hz ~1	CSR	R	C-V	288	492	**637**	**1.10**	1244	**857**	**1.42**	12.70	Pd

R290 HMBP | HBP • 50 Hz

Natural Refrigerant

MODEL	DISPLACEMENT cm³	POWER hp	APPLICATION	CPR COOLING	VOLTAGE FREQUENCY	MOTOR	STARTING	EXPANSION	REFRIGERATION CAPACITY COP in W/W 1 W = 0,864 kcal/h = 3,415 BTU/h Evaporating Temperature ºC							WEIGHT Kg	DESIGN
									Cecomaf (W)					Ashrae			
									-25	-15	5 W	5 COP	10	7.2 W	7.2 COP		
NBC22RA	2.20	1/12	HMBP	F	220-240V 50Hz ~1	CSIR	R	C-V	54	93	**222**	**1.87**	264	**265**	**2.21**	5.20	Bc
NBC30RA	3.10	1/10	HMBP	F	220-240V 50Hz ~1	CSIR	R	C-V	100	157	**354**	**2.21**	421	**423**	**2.61**	5.80	Be
NUY45RAa	4.50	1/5	HMBP	F	220-240V 50Hz ~1	CSIR	R	C-V	142	231	**516**	**2.36**	610	**615**	**2.77**	9.30	Ub
NUY55RAa	4.50	1/5	HMBP	F	220-240V 50Hz ~1	CSIR	R	C-V	192	298	**653**	**2.29**	771	**778**	**2.69**	9.50	Ub
NUY60RAa	6.00	1/4	HMBP	F	220-240V 50Hz ~1	CSIR	R	C-V	208	328	**714**	**2.32**	841	**850**	**2.72**	9.48	Ub
NUY70RAa	6.70	1/4	HMBP	F	220-240V 50Hz ~1	CSIR	R	C-V	248	382	**817**	**2.34**	961	**972**	**2.75**	9.60	Uc
NUY70RAb	6.70	1/4	HMBP	F	220-240V 50Hz ~1	CSR	R	C-V	248	382	**817**	**2.47**	961	**972**	**2.90**	9.70	Uc
NLY80RAa	8.10	3/8	HMBP	F	220-240V 50Hz ~1	CSIR	R	C-V	258	411	**930**	**2.21**	1104	**1111**	**2.60**	10.54	Ld
NLY80RAb	8.10	3/8	HMBP	F	220-240V 50Hz ~1	CSR	R	C-V	258	411	**930**	**2.38**	1104	**1111**	**2.80**	10.64	Ld
NUY90RA	8.90	3/8	HMBP	F	220-240V 50Hz ~1	CSR	R	C-V	290	461	**1045**	**2.25**	1240	**1247**	**2.65**	9.80	Uc

Green Cooling Models

New Models

(**) Under development

This table continues in the following page

R290 HMBP | HBP • 50 Hz

Natural Refrigerant

MODEL	DISPLACEMENT cm³	POWER hp	APPLICATION	CPR COOLING	VOLTAGE FREQUENCY	MOTOR	STARTING	EXPANSION	REFRIGERATION CAPACITY COP in W/W 1 W = 0,864 kcal/h = 3,415 BTU/h Evaporating Temperature ºC							WEIGHT Kg	DESIGN
									Cecomaf (W)					Ashrae			
									-25	-15	5 W	5 COP	10	7.2 W	7.2 COP		
NLY12RAa	10.70	3/8	HMBP	F	220-240V 50Hz ~1	CSIR	R	C-V	379	584	**1224**	**2.06**	1432	**1453**	**2.41**	11.44	Ld
NLY12RAb	10.70	3/8	HMBP	F	220-240V 50Hz ~1	CSR	R	C-V	379	597	**1249**	**2.28**	1457	**1480**	**2.66**	11.54	Ld
NLY12RGa	10.70	1/2	HMBP	F	200-220/220-230V 50/60Hz~1	CSIR	R	C-V	341	553	**1217**	**2.03**	1432	**1448**	**2.39**	12.14	Ld
NLY12RGb	10.70	1/2	HMBP	F	200-220/220-230V 50/60Hz~1	CSR	R	C-V	355	554	**1226**	**2.20**	1450	**1462**	**2.58**	12.24	Ld
NPY12RAa	12.10	1/2	HBP	F	220-240V 50Hz ~1	CSIR	R	C-V	-	635	**1460**	**2.08**	1735	**1745**	**2.45**	12.16	Pd
NPY12RAb	12.10	1/2	HBP	F	220-240V 50Hz ~1	CSR	R	C-V	-	635	**1460**	**2.28**	1735	**1745**	**2.70**	12.26	Pd
NPT14RA	14.32	1/2	HBP	F	220-240V 50Hz ~1	CSR	R	C-V	-	763	**1709**	**2.26**	2085	**2065**	**2.69**	12.25	Pd
NPT16RA	16.10	2/3	HBP	F	220-240V 50Hz ~1	CSR	R	C-V	-	853	**1911**	**2.18**	2331	**2310**	**2.55**	12.34	Pd
NX18TBa	18.40	3/4	HMBP	F	220-240V 50Hz ~1	CSR	R	C-V	511	852	**2039**	**2.22**	2440	**2445**	**2.61**	16.14	Xd
NX21TBa	20.72	7/8	HMBP	F	220-240V 50Hz ~1	CSR	R	C-V	601	973	**2267**	**2.18**	2705	**2714**	**2.55**	16.09	Xd

R290 HMBP | HBP • 60 Hz

Natural Refrigerant

MODEL	DISPLACEMENT cm³	POWER hp	APPLICATION	CPR COOLING	VOLTAGE FREQUENCY	MOTOR	STARTING	EXPANSION	REFRIGERATION CAPACITY COP in W/W 1 W = 0,864 kcal/h = 3,415 BTU/h Evaporating Temperature ºC							WEIGHT Kg	DESIGN
									Cecomaf (W)					Ashrae			
									-25	-15	5 W	5 COP	10	7.2 W	7.2 COP		
NLY45RRa	4.56	1/5	HMBP	F	115-127V 60Hz ~1	CSIR	R	C-V	180	282	**618**	**2.08**	729	**736**	**2.41**	9.19	Lc
NLY45RRb	4.56	1/5	HMBP	F	115-127V 60Hz ~1	CSR	R	C-V	180	282	**618**	**2.25**	729	**736**	**2.61**	9.29	Lc
NLY60RRa	5.98	1/5	HMBP	F	115-127V 60Hz ~1	CSIR	R	C-V	245	385	**827**	**2.11**	971	**983**	**2.43**	9.68	Lc
NLY60RRb	5.98	1/5	HMBP	F	115-127V 60Hz ~1	CSR	R	C-V	245	385	**827**	**2.29**	971	**983**	**2.65**	9.78	Lc
NLY75RRa	7.57	3/8	HMBP	F	115-127V 60Hz ~1	CSIR	R	C-V	278	445	**1010**	**2.14**	1200	**1207**	**2.50**	10.07	Ld
NLY75RRb	7.57	3/8	HMBP	F	115-127V 60Hz ~1	CSR	R	C-V	278	454	**1034**	**2.36**	1227	**1235**	**2.76**	10.17	Ld
NLY80RRa	8.10	1/4	HMBP	F	115-127V 60Hz ~1	CSIR	R	C-V	314	497	**1098**	**2.12**	1297	**1308**	**2.45**	10.03	Ld
NLY80RRb	8.10	1/4	HMBP	F	115-127V 60Hz ~1	CSR	R	C-V	314	497	**1098**	**2.31**	1297	**1308**	**2.67**	10.13	Ld
NLY90RRa	9.09	1/3	HMBP	F	115-127V 60Hz ~1	CSIR	R	C-V	353	563	**1239**	**2.03**	1462	**1476**	**2.35**	10.55	Ld
NLY90RRb	9.09	1/3	HMBP	F	115-127V 60Hz ~1	CSR	R	C-V	353	563	**1239**	**2.21**	1462	**1476**	**2.56**	10.65	Ld
NLT12RR	10.70	1/2	HMBP	F	115-127V 60Hz ~1	CSR	R	C-V	424	691	**1501**	**2.15**	1761	**1784**	**2.51**	11.91	Ld
NLY12RGa	10.70	1/2	HMBP	F	200-220/220-230V 50/60Hz ~1	CSIR	R	C-V	418	669	**1445**	**2.07**	1696	**1718**	**2.41**	12.14	Ld
NLY12RGb	10.70	1/2	HMBP	F	200-220/220-230V 50/60Hz ~1	CSR	R	C-V	429	679	**1469**	**2.25**	1727	**1747**	**2.63**	12.24	Ld

Green Cooling Models

New Models

R600a LBP • 50 Hz

Natural Refrigerant

MODEL	DISPLACEMENT	POWER	APPLICATION	CPR COOLING	VOLTAGE FREQUENCY	MOTOR	STARTING	EXPANSION	REFRIGERATION CAPACITY COP in W/W 1 W = 0,864 kcal/h = 3,415 BTU/h Evaporating Temperature ºC							WEIGHT	DESIGN
									Cecomaf (W)					Ashrae			
											-25		-10	-23.3			
	cm³	hp							-35	-30	W	COP		W	COP	Kg	
L22CL	2.20	1/18	LBP	S	220-240V 50Hz ~1	RSIR	P	C	12	31	**23**	**0.67**	48	**30**	**0.85**	3.60	SLb
L30CL	3.10	1/16	LBP	S	220-240V 50/60Hz ~1	RSIR	P	C	19	49	**36**	**0.77**	75	**48**	**0.98**	3.80	SLc
B35C	3.50	1/15	LBP	S	220-240V 50Hz ~1	RSIR	P	C	16	28	**41**	**0.95**	89	**56**	**1.23**	4.50	Bc
B35C	3.50	1/15	LBP	S	220-240V 50/60Hz ~1	RSIR	P	C	17	26	**37**	**0.77**	79	**50**	**1.00**	4.50	Bb
B35CA	3.50	1/15	LBP	S	220-240V 50Hz ~1	RSCR	P	C	21	31	**43**	**1.13**	96	**58**	**1.45**	5.10	Bc
B43CB	4.30	1/12	LBP	S	220-240V 50Hz ~1	RSIR	P	C	29	39	**51**	**0.91**	108	**69**	**1.16**	5.00	Bc
B43CB	4.30	1/12	LBP	S	220-240V 50Hz ~1	RSCR	P	C	29	39	**51**	**1.02**	108	**69**	**1.29**	5.00	Bc
B43CB	3.80	1/20	LBP	S	220-240V 50/60Hz ~1	RSIR	P	C	25	33	**44**	**0.87**	92	**58**	**1.10**	5.00	Bc
B43C0	4.30	1/12	LBP	S	100V 50/60Hz ~1	RSIR	P	C	27	69	**51**	**0.93**	107	**69**	**1.18**	4.60	Bc
B52CL	5.20	1/10	LBP	S	220-240V 50Hz ~1	RSIR	P	C	34	44	**58**	**0.94**	124	**78**	**1.20**	5.00	Bc
B52CL	5.20	1/10	LBP	S	220-240V 50/60Hz ~1	RSIR	P	C	35	45	**60**	**0.91**	127	**80**	**1.16**	5.00	Bc
B52CL	5.20	1/10	LBP	S	220-240V 50Hz ~1	RSIR	P	C	34	44	**58**	**1.11**	124	**78**	**1.42**	5.00	Be
B52C0L	5.20	1/10	LBP	S	100V 50/60Hz ~1	RSIR	P	C	31	78	**58**	**0.86**	121	**78**	**1.10**	4.80	Bc
B60CBL	6.00	1/8	LBP	S	220-240V 50Hz ~1	RSIR	P	C	38	95	**71**	**1.02**	149	**95**	**1.30**	5.00	Bc
B60CBL	6.00	1/8	LBP	S	220-240V 50Hz ~1	RSIR	P	C	38	96	**71**	**1.10**	149	**95**	**1.40**	5.00	Be
B65CL	6.50	1/8	LBP	S	220-240V 50Hz ~1	RSIR	P	C	42	105	**78**	**0.86**	163	**105**	**1.10**	5.00	Be
B65CL	6.50	1/8	LBP	S	220-240V 50Hz ~1	RSIR	P	C	42	105	**78**	**1.10**	163	**105**	**1.40**	5.20	Be
HLY80AAa	8.10	1/7	LBP	S	220-240V 50Hz ~1	RSIR	P	C	54	74	**99**	**1.11**	201	**131**	**1.41**	9.45	Lb
HLY80AAb	8.10	1/7	LBP	S	220-240V 50Hz ~1	RSCR	P	C	54	74	**99**	**1.18**	203	**131**	**1.49**	9.56	Lb
HLY90AAa	9.09	1/6	LBP	S	220-240V 50Hz ~1	RSIR	P	C	67	84	**109**	**1.11**	231	**145**	**1.41**	9.85	Lb
HLY90AAb	9.09	1/6	LBP	S	220-240V 50Hz ~1	RSCR	P	C	65	85	**111**	**1.18**	234	**148**	**1.49**	9.96	Lb
HLY99AAa	9.95	1/6	LBP	S	220-240V 50Hz ~1	RSIR	P	C	69	90	**119**	**1.10**	249	**158**	**1.40**	10.95	Lc
HLY99AAb	9.95	1/6	LBP	S	220-240V 50Hz ~1	RSCR	P	C	67	90	**120**	**1.16**	250	**159**	**1.48**	11.06	Lc
HPY12AAa	12.10	1/5	LBP	S	220-240V 50Hz ~1	RSIR	P	C	79	107	**144**	**1.13**	301	**192**	**1.43**	11.13	Pc
HPY12AAb	12.10	1/5	LBP	S	220-240V 50Hz ~1	RSCR	P	C	79	107	**144**	**1.18**	301	**192**	**1.50**	11.24	Pc
HPY12AGa	12.10	1/4	LBP	S	200-220/220-230V 50/60Hz ~1	RSIR	P	C	79	107	**144**	**1.10**	301	**192**	**1.40**	10.90	Pc
HPY12AGb	12.10	1/4	LBP	S	200-220/220-230V 50/60Hz ~1	RSCR	P	C	79	107	**144**	**1.10**	301	**192**	**1.40**	11.01	Pc
HPY14AAa	14.32	1/5	LBP	S	220-240V 50Hz ~1	RSIR	P	C	92	124	**166**	**1.13**	345	**221**	**1.43**	11.41	Pc
HPY14AAb	14.32	1/5	LBP	S	220-240V 50Hz ~1	RSCR	P	C	92	124	**166**	**1.19**	345	**221**	**1.50**	11.52	Pc
HPY14AJa	14.32	1/5	LBP	S	100V 50/60Hz ~1	RSIR	P	C	86	116	**157**	**1.01**	336	**209**	**1.28**	10.75	Pd
HPY14AJb	14.32	1/5	LBP	S	100V 50/60Hz ~1	RSCR	P	C	86	116	**157**	**1.07**	336	**209**	**1.35**	10.86	Pd
HPY16AAa	16.15	1/4	LBP	S	220-240V 50Hz ~1	RSIR	P	C	102	136	**181**	**1.14**	381	**242**	**1.44**	10.64	Pc
HPY16AAb	16.15	1/4	LBP	S	220-240V 50Hz ~1	RSCR	P	C	102	136	**181**	**1.19**	381	**242**	**1.51**	10.75	Pc

Green Cooling Models

New Models

R600a LBP • 60 Hz

Natural Refrigerant

MODEL	DISPLACEMENT cm³	POWER hp	APPLICATION	CPR COOLING	VOLTAGE FREQUENCY	MOTOR	STARTING	EXPANSION	REFRIGERATION CAPACITY COP in W/W 1 W = 0,864 kcal/h = 3,415 BTU/h Evaporating Temperature ºC							WEIGHT Kg	DESIGN
									Cecomaf (W)					Ashrae			
									-35	-30	-25 W	-25 COP	-10	-23.3 W	-23.3 COP		
L22C5L	2.20	1/16	LBP	S	110-120V 60Hz ~1	RSIR	P	C	16	22	**30**	**0.86**	63	**40**	**1.10**	3.60	SLb
L30CL	3.10	1/14	LBP	S	220-240V 50/60Hz ~1	RSIR	P	C	22	30	**41**	**0.90**	85	**55**	**1.00**	3.80	SLb
B35C	3.50	1/15	LBP	S	220-240V 50/60Hz ~1	RSIR	P	C	18	31	**45**	**0.94**	93	**60**	**1.21**	4.60	Bb
B35C5B	3.50	1/12	LBP	S	110-115V 60Hz ~1	RSIR	P	C	28	37	**49**	**0.95**	102	**65**	**1.21**	4.60	Bc
B35C5BL	3.50	1/12	LBP	S	110-120 60Hz ~1	RSCR	P	C	26	36	**49**	**1.10**	103	**65**	**1.40**	4.60	Bc
B43CB	4.30	1/10	LBP	S	220-240V 60Hz ~1	RSIR	P	C	28	38	**52**	**0.98**	109	**70**	**1.25**	4.60	Bc
B43CB	4.30	1/10	LBP	S	220-240V 60Hz ~1	RSCR	P	C	31	43	**58**	**1.06**	121	**78**	**1.35**	4.60	Bc
B43C0	4.30	1/10	LBP	S	100V 50/60Hz ~1	RSIR	P	C	31	43	**58**	**0.93**	121	**78**	**1.18**	4.60	Bb
B43C5B	4.30	1/10	LBP	S	110-115V 60Hz ~1	RSIR	P	C	31	43	**58**	**1.02**	121	**78**	**1.30**	4.60	Bb
B52C5BL	5.20	1/8	LBP	S	110-120V 60Hz ~1	RSCR	P	C	38	53	**71**	**1.18**	149	**95**	**1.50**	5.20	Be
B52C0L	5.20	1/8	LBP	S	100V 50/60Hz ~1	RSIR	P	C	38	53	**71**	**0.86**	149	**95**	**1.10**	4.80	Bc
B60CBL	6.00	1/8	LBP	S	220-240V 60Hz ~1	RSIR	P	C	44	61	**83**	**1.02**	174	**110**	**1.30**	4.60	Bc
B60C5BL	6.00	1/8	LBP	S	110-120V 60Hz ~1	RSCR	P	C	44	61	**82**	**1.10**	172	**109**	**1.40**	5.20	Bd
HPY12AGa	12.10	1/4	LBP	S	200-220/220-230V 50/60Hz ~1	RSIR	P	C	92	126	**168**	**1.08**	351	**224**	**1.37**	10.90	Pc
HPY12AGb	12.10	1/4	LBP	S	200-220/220-230V 50/60Hz ~1	RSCR	P	C	92	126	**168**	**1.08**	351	**224**	**1.37**	11.01	Pc
HPY14AJa	14.32	1/5	LBP	S	100V 50/60Hz ~1	RSIR	P	C	101	139	**187**	**1.06**	393	**250**	**1.34**	10.75	Pd
HPY14AJb	14.32	1/5	LBP	S	100V 50/60Hz ~1	RSCR	P	C	101	139	**187**	**1.12**	393	**250**	**1.41**	10.86	Pd

R600a HMBP | HBP • 50 Hz

MODEL	DISPLACEMENT cm³	POWER hp	APPLICATION	CPR COOLING	VOLTAGE FREQUENCY	MOTOR	STARTING	EXPANSION	REFRIGERATION CAPACITY COP in W/W 1 W = 0,864 kcal/h = 3,415 BTU/h Evaporating Temperature ºC							WEIGHT Kg	DESIGN
									Cecomaf (W)					Ashrae			
									-25	-15	5 W	5 COP	10	7.2 W	7.2 COP		
HUY55MAa	5.50	1/10	HMBP	S	220-240V 50Hz ~1	RSIR	P	C	64	110	**272**	**2.47**	327	**323**	**2.86**	8.95	Ub
HUY55MAb	5.50	1/10	HMBP	S	220-240V 50Hz ~1	RSCR	P	C	64	110	**272**	**2.58**	327	**323**	**2.99**	9.05	Ub
HUY70MAa	6.70	1/8	HMBP	S	220-240V 50Hz ~1	RSIR	P	C	80	137	**338**	**2.47**	406	**401**	**2.87**	8.90	Ub
HUY70MAb	6.70	1/8	HMBP	S	220-240V 50Hz ~1	RSCR	P	C	80	137	**338**	**2.59**	406	**401**	**2.99**	9.01	Ub
HLY99RAa	9.95	1/6	HMBP	F	220-240V 50Hz ~1	CSIR	R	C-V	103	178	**458**	**2.03**	555	**547**	**2.35**	9.31	Lc
HLY99RAb	9.95	1/6	HMBP	F	220-240V 50Hz ~1	CSR	R	C-V	103	178	**458**	**2.21**	555	**547**	**2.57**	9.41	Lc
HPY12RAa	12.10	1/5	HMBP	F	220-240V 50Hz ~1	CSIR	R	C-V	135	236	**583**	**2.15**	700	**692**	**2.50**	10.5	Pc
HPY12RAb	12.10	1/5	HMBP	F	220-240V 50Hz ~1	CSR	R	C-V	135	236	**583**	**2.32**	700	**692**	**2.70**	10.6	Pc
HPY14RAa	14.32	1/5	HBP	F	220-240V 50Hz ~1	CSIR	R	C-V	-	281	**668**	**2.08**	797	**791**	**2.40**	9.74	Pc
HPY14RAb	14.32	1/5	HBP	F	220-240V 50Hz ~1	CSR	R	C-V	-	281	**668**	**2.26**	797	**791**	**2.61**	9.84	Pc
HPY16RAa	16.15	1/4	HMBP	F	220-240V 50Hz ~1	CSIR	R	C-V	179	310	**755**	**2.12**	904	**896**	**2.45**	10.99	Pd
HPY16RAb	16.15	1/4	HMBP	F	220-240V 50Hz ~1	CSR	R	C-V	179	310	**755**	**2.29**	904	**896**	**2.64**	11.09	Pd

	Conditions			
	CECOMAF		ASHRAE	
	LBP/LMBP (A)	HMBP/HBP (C)	LBP/LMBP (B)	HMBP/HBP (D)
Evaporating temperature ºC	-25	5	-23.3	7.2
Condensing temperature ºC	55	55	55	55
Liquid temperature ºC	55	55	32	46
Suction temperature ºC	32	32	32	35
Ambient temperature ºC	32	32	32	35

Measurement conversion

R290
W (A) x 1.36 = W (B)
W (C) x 1.20 = W (D)

R600a
W (A) x 1.34 = W (B)
W (C) x 1.19 = W (D)

3.

Compressors Catalogue

R134a

R134a (*) LBP | LMBP • 50 Hz

MODEL	DISPLACEMENT cm³	POWER hp	APPLICATION	CPR COOLING	VOLTAGE FREQUENCY	MOTOR	STARTING	EXPANSION	REFRIGERATION CAPACITY COP in W/W 1 W = 0,864 kcal/h = 3,415 BTU/h Evaporating Temperature ºC							WEIGHT Kg	DESIGN
											Cecomaf (W)			Ashrae			
											-25			-23.3			
									-35	-30	W	COP	-10	W	COP		
L22HL	2.20	1/20	LBP	S	220-240V 50Hz ~1	RSIR	P	C	18	24	**34**	**0.63**	79	**47**	**0.82**	3.70	SLb
L30HL	3.10	1/12	LBP	S	220-240V 50/60Hz ~1	RSIR	P	C	23	34	**49**	**0.69**	112	**67**	**0.90**	4.20	SLc
B38H	3.80	1/8	LBP	S/F	220-240V 50Hz ~1	RSIR	P	C	33	45	**63**	**0.72**	147	**86**	**0.95**	4.60	Bc
B43H	4.30	1/7	LBP	S/F	220-240V 50/60Hz ~1	RSIR	P	C	33	50	**71**	**0.76**	157	**97**	**1.00**	5.40	Bd
B43HB	4.30	1/7	LBP	S	220-240V 50Hz ~1	RSIR	P	C	35	51	**72**	**0.92**	158	**98**	**1.20**	5.00	Bd
B48H	4.80	1/8	LBP	S	220-240V 50Hz ~1	RSIR	P	C	37	56	**79**	**0.80**	174	**108**	**1.05**	5.00	Bc
GL45AAa	4.56	1/8	LBP	S	220-240V 50Hz ~1	RSIR	P	C	37	57	**81**	**0.81**	184	**112**	**1.06**	7.91	Lb
GL45AAb	4.56	1/8	LBP	S	220-240V 50Hz ~1	CSIR	R	C-V	37	57	**81**	**0.81**	184	**112**	**1.06**	8.06	Lb
GL45ANa	4.56	1/8	LBP	S	200-240/220-230V 50/60Hz ~1	RSIR	P	C	36	56	**80**	**0.78**	184	**110**	**1.03**	8.42	Lb
GLY45AAa	4.56	1/8	LBP	S	220-240V 50Hz ~1	RSIR	P	C	46	65	**89**	**1.01**	192	**121**	**1.30**	8.70	Lb
GLY45AAb	4.56	1/8	LBP	S	220-240V 50Hz ~1	RSCR	P	C	47	66	**90**	**1.05**	193	**122**	**1.36**	8.80	Lb
GL60AAa	5.98	1/6	LBP	S	220-240V 50Hz ~1	RSIR	P	C	50	75	**107**	**0.85**	239	**147**	**1.10**	8.45	Lb
GL60AAb	5.98	1/6	LBP	S	220-240V 50Hz ~1	CSIR	R	C-V	50	75	**107**	**0.85**	239	**147**	**1.10**	8.60	Lb
GL60ANa	5.98	1/6	LBP	S	200-240/220-230V 50/60Hz ~1	RSIR	P	C	57	82	**114**	**0.83**	244	**155**	**1.09**	9.11	Lc
GL60ANb	5.98	1/6	LBP	F	200-240/220-230V 50/60Hz ~1	CSIR	R	C-V	82	94	**116**	**0.84**	244	**155**	**1.09**	9.26	Lc
GL60ANc	5.98	1/6	LBP	S	200-240/220-230V 50/60Hz ~1	CSIR	R	C-V	82	94	**116**	**0.84**	244	**155**	**1.09**	9.26	Lc
GLY60AAa	5.98	1/6	LBP	S	220-240V 50Hz ~1	RSIR	P	C	58	85	**119**	**1.04**	255	**162**	**1.34**	8.49	Lb
GLY60AAb	5.98	1/6	LBP	S	220-240V 50Hz ~1	RSCR	P	C	59	86	**120**	**1.10**	255	**163**	**1.42**	8.60	Lb
GL70ANa	6.65	1/5	LBP	S	200-220/220-230V 50/60Hz ~1	RSIR	P	C	70	96	**129**	**0.83**	278	**176**	**1.08**	9.49	Lb
GLY70AAa	6.65	1/5	LBP	S	220-240V 50Hz ~1	RSIR	P	C	66	96	**133**	**1.03**	289	**181**	**1.33**	9.09	Lc
GLY70AAb	6.65	1/5	LBP	S	220-240V 50Hz ~1	RSCR	P	C	66	96	**133**	**1.08**	289	**181**	**1.40**	9.20	Lc
GL80AAa	8.10	1/5	LBP	S	220-240V 50Hz ~1	RSIR	P	C	68	102	**144**	**0.89**	326	**198**	**1.15**	8.98	Lc
GL80AAb	8.10	1/5	LBP	S	220-240V 50Hz ~1	CSIR	R	C-V	68	102	**144**	**0.89**	326	**198**	**1.15**	9.13	Lc
GL80ANa	8.10	1/5	LBP	S	200-220/220-230V 50/60Hz ~1	RSIR	P	C	76	107	**148**	**0.83**	331	**202**	**1.09**	9.75	Lc
GL80ANb	8.10	1/5	LBP	F	200-220/220-230V 50/60Hz ~1	CSIR	R	C-V	76	107	**148**	**0.83**	331	**202**	**1.09**	9.90	Lc
GL80ANc	8.10	1/5	LBP	S	200-220/220-230V 50/60Hz ~1	CSIR	R	C-V	76	107	**148**	**0.83**	331	**202**	**1.09**	9.90	Lc
GLY80AAa	8.10	1/5	LBP	S	220-240V 50Hz ~1	RSIR	P	C	92	123	**164**	**1.07**	349	**222**	**1.37**	9.51	Lc
GLY80AAb	8.10	1/5	LBP	S	220-240V 50Hz ~1	RSCR	P	C	93	124	**165**	**1.13**	351	**223**	**1.45**	9.62	Lc
GL90AAa	9.09	1/4	LBP	S	220-240V 50Hz ~1	RSIR	P	C	82	120	**165**	**0.90**	351	**224**	**1.15**	9.39	Lc
GL90AAb	9.09	1/4	LBP	S	220-240V 50Hz ~1	CSIR	R	C-V	82	120	**165**	**0.90**	351	**224**	**1.15**	9.54	Lc
GL90ANa	9.09	1/4	LBP	S	200-220/220-230V 50/60Hz ~1	RSIR	P	C	85	118	**163**	**0.84**	366	**222**	**1.10**	10.33	Ld
GL90ANb	9.09	1/4	LBP	F	200-220/220-230V 50/60Hz ~1	CSIR	R	C-V	85	118	**163**	**0.84**	366	**222**	**1.10**	10.48	Ld
GL90ANc	9.09	1/4	LBP	S	200-220/220-230V 50/60Hz ~1	CSIR	R	C-V	85	118	**163**	**0.84**	366	**222**	**1.10**	10.48	Ld
GLY90AAa	9.09	1/4	LBP	S	220-240V 50Hz ~1	RSIR	P	C	104	140	**186**	**1.07**	387	**251**	**1.37**	9.43	Lc
GLY90AAb	9.09	1/4	LBP	S	220-240V 50Hz ~1	RSCR	P	C	104	140	**187**	**1.13**	388	**252**	**1.45**	9.54	Lc
GL99AAa	9.95	1/4	LBP	S	220-240V 50Hz ~1	RSIR	P	C	83	125	**175**	**0.92**	377	**238**	**1.19**	9.64	Ld
GL99AAb	9.95	1/4	LBP	S	220-240V 50Hz ~1	CSIR	R	C-V	83	125	**175**	**0.92**	377	**238**	**1.19**	9.79	Ld
GLM12LAa	10.70	3/8	LBP	F	220-240V 50Hz ~1	CSIR	R	C-V	98	143	**200**	**0.92**	445	**273**	**1.19**	10.06	Ld
GLM12LAb	10.70	3/8	LBP	F	220-240V 50Hz ~1	CSR	R	C-V	98	145	**204**	**0.99**	451	**279**	**1.29**	10.16	Ld
GPY12AAa	12.10	3/8	LBP	S	220-240V 50Hz ~1	RSIR	P	C	128	178	**241**	**0.96**	500	**326**	**1.23**	12.07	Pd
GPY12AAb	12.10	3/8	LBP	S	220-240V 50Hz ~1	RSCR	P	C	128	178	**241**	**1.04**	500	**326**	**1.33**	12.18	Pd
GPY12LAa	12.10	3/8	LBP	F	220-240V 50Hz ~1	CSIR	R	C-V	113	162	**225**	**1.00**	509	**308**	**1.30**	12.78	Pd
GPY12LAb	12.10	3/8	LBP	F	220-240V 50Hz ~1	CSR	R	C-V	113	162	**225**	**1.06**	509	**308**	**1.38**	12.89	Pd
GP14CG	14.17	3/8	LBP	F	200-220/220-230V 50/60Hz ~1	RSIR	R	C	99	158	**228**	**0.83**	509	**314**	**1.08**	10.62	Pc
GP14FB	14.17	3/8	LBP	F	220-240V 50Hz ~1	CSIR	R	C-V	99	157	**228**	**0.90**	509	**313**	**1.16**	10.36	Pc
GP14FC	14.17	3/8	LBP	F	100V 50/60Hz ~1	CSIR	R	C-V	106	160	**229**	**0.81**	519	**314**	**1.06**	12.20	Pc

Green Cooling Models

New Models

(*) Or HF01234yf

(**) Under development

This table continues in the following page

R134a (*) LBP | LMBP • 50 Hz

MODEL	DISPLACEMENT cm³	POWER hp	APPLICATION	CPR COOLING	VOLTAGE FREQUENCY	MOTOR	STARTING	EXPANSION	REFRIGERATION CAPACITY COP in W/W 1 W = 0,864 kcal/h = 3,415 BTU/h Evaporating Temperature ºC							WEIGHT Kg	DESIGN
									Cecomaf (W)					Ashrae			
									-35	-30	-25 W	-25 COP	-10	-23.3 W	-23.3 COP		
GPY14NGa	14.32	1/3	LMBP	F	200-220/220-230V 50/60Hz ~1	CSIR	R	C-V	147	205	**283**	**0.92**	636	**376**	**1.14**	12.59	Pd
GPY14NGb	14.32	1/3	LMBP	F	200-220/220-230V 50/60Hz ~1	CSR	R	C-V	148	206	**284**	**0.97**	636	**388**	**1.27**	12.69	Pd
GP16FB	16.15	3/8	LBP	F	220-240V 50Hz ~1	CSIR	R	C-V	109	182	**266**	**0.89**	585	**366**	**1.14**	11.79	Pd
GPY16LAa	16.15	3/8	LBP	F	220-240V 50Hz ~1	CSIR	R	C-V	151	220	**306**	**1.02**	677	**419**	**1.32**	11.73	Pd
GPY16LAb	16.15	3/8	LBP	F	220-240V 50Hz ~1	CSR	R	C-V	151	220	**306**	**1.09**	677	**419**	**1.42**	11.83	Pd
GX21FB	20.72	2/3	LBP	F	220-240V 50Hz ~1	CSIR	R	C-V	151	243	**351**	**0.93**	778	**483**	**1.20**	15.75	Xc

R134a (*) LBP | LMBP • 60 Hz

MODEL	DISPLACEMENT cm³	POWER hp	APPLICATION	CPR COOLING	VOLTAGE FREQUENCY	MOTOR	STARTING	EXPANSION	REFRIGERATION CAPACITY COP in W/W 1 W = 0,864 kcal/h = 3,415 BTU/h Evaporating Temperature ºC							WEIGHT Kg	DESIGN
									Cecomaf (W)					Ashrae			
									-35	-30	-25 W	-25 COP	-10	-23.3 W	-23.3 COP		
L22H5	2.20	1/20	LBP	S	110-120V 60Hz ~1	RSIR	P	C	19	28	**39**	**0.56**	87	**53**	**0.75**	3.60	SLb
L30HL	3.10	1/12	LBP	S	220-240V 50/60Hz ~1	RSIR	P	C	25	37	**54**	**0.80**	129	**74**	**1.05**	4.20	SLc
L30H5L	3.10	1/12	LBP	S	110-120V 60Hz ~1	RSIR	P	C	26	39	**57**	**0.74**	134	**78**	**0.96**	3.85	SLc
B38H	3.80	1/7	LBP	S/F	220-240V 60Hz ~1	RSIR	P	C	33	48	**70**	**0.85**	171	**97**	**1.11**	4.60	Bc
B38H5	3.80	1/12	LBP	S	110-115V 60Hz ~1	RSIR	P	C	34	50	**71**	**0.96**	158	**97**	**1.10**	5.00	Bc
B38H5L	3.80	1/7	LBP	S	110-120V 60Hz ~1	RSIR	P	C	34	52	**72**	**0.83**	134	**97**	**1.06**	4.60	Bc
B43H	4.30	1/7	LBP	S/F	220-240V 50/60Hz ~1	RSIR	P	C	38	56	**80**	**0.85**	187	**110**	**1.11**	5.40	Bd
B43HB	4.30	1/10	LBP	S	220-240V 50/60Hz ~1	RSCR	P	C	39	58	**81**	**1.00**	181	**110**	**1.30**	5.20	Bd
B43H5L	4.30	1/10	LBP	S	110-120V 60Hz ~1	RSIR	P	C	34	58	**82**	**0.81**	155	**110**	**1.05**	5.00	Bc
GL45ADa	4.56	1/8	LBP	S	115V 60Hz ~1	RSIR	P	C	42	65	**95**	**0.80**	215	**130**	**1.05**	8.19	Lb
GL45ADb	4.56	1/8	LBP	S	115V 60Hz ~1	CSIR	R	C-V	42	65	**95**	**0.80**	215	**130**	**1.05**	8.34	Lb
GL45ANa	4.56	1/8	LBP	S	200-240/220-230V 50/60Hz ~1	RSIR	P	C	43	65	**93**	**0.83**	213	**128**	**1.09**	8.42	Lb
GL60ADa	5.98	1/6	LBP	S	115V 60Hz ~1	RSIR	P	C	65	95	**132**	**0.85**	290	**180**	**1.10**	9.48	Lb
GL60ADb	5.98	1/6	LBP	S	115V 60Hz ~1	CSIR	R	C-V	65	95	**132**	**0.85**	290	**180**	**1.10**	9.63	Lb
GL60ANa	5.98	1/6	LBP	S	200-240/220-230V 50/60Hz ~1	RSIR	P	C	95	108	**133**	**0.89**	285	**178**	**1.15**	9.11	Lc
GL60ANb	5.98	1/6	LBP	F	200-240/220-230V 50/60Hz ~1	CSIR	R	C-V	95	108	**133**	**0.89**	285	**178**	**1.15**	9.26	Lc
GL60ANc	5.98	1/6	LBP	S	200-240/220-230V 50/60Hz ~1	CSIR	R	C-V	95	108	**133**	**0.89**	285	**178**	**1.15**	9.26	Lc
GUY60NRb	6.00	1/5	LMBP	F	115-127V 60Hz ~1	CSIR	R	C-V	80	113	**158**	**1.15**	362	**215**	**1.49**	9.00	Ub
GUY60NRc	6.00	1/5	LMBP	S	115-127V 60Hz ~1	CSIR	R	C-V	80	113	**158**	**1.15**	362	**215**	**1.49**	9.00	Ub
GL70ANa	6,65	1/5	LBP	S	200-220/220-230V 50/60Hz ~1	RSIR	P	C	80	110	**150**	**0.90**	323	**204**	**1.17**	9.49	Lc
GUY70NRb	6.70	1/5	LMBP	F	115-127V 60Hz ~1	CSIR	R	C	86	121	**166**	**1.15**	386	**226**	**1.49**	9.30	Ub
GUY70NRc	6.70	1/5	LMBP	S	115-127V 60Hz ~1	CSIR	R	C	86	121	**166**	**1.15**	386	**226**	**1.49**	9.30	Ub
GL80ANa	8.10	1/5	LBP	S	200-220/220-230V 50/60Hz ~1	RSIR	P	C	87	124	**172**	**0.92**	385	**235**	**1.19**	9.75	Lc
GL80ANb	8.10	1/5	LBP	F	200-220/220-230V 50/60Hz ~1	CSIR	R	C-V	87	124	**172**	**0.92**	385	**235**	**1.19**	9.90	Lc
GL80ANc	8.10	1/5	LBP	S	200-220/220-230V 50/60Hz ~1	CSIR	R	C-V	87	124	**172**	**0.92**	385	**235**	**1.19**	9.90	Lc
GUY80NRb	8.10	1/4	LMBP	F	115-127V 60Hz ~1	CSIR	R	C-V	107	151	**209**	**1.14**	480	**285**	**1.49**	9.60	Ub
GUY80NRc	8.10	1/4	LMBP	S	115-127V 60Hz ~1	CSIR	R	C-V	107	151	**209**	**1.14**	480	**285**	**1.49**	9.60	Ub
GL90ANa	9.09	1/4	LBP	S	200-220/220-230V 50/60Hz ~1	RSIR	P	C	96	134	**185**	**0.93**	421	**254**	**1.20**	10.33	Ld
GL90ANb	9.09	1/4	LBP	F	200-220/220-230V 50/60Hz ~1	CSIR	R	C-V	96	134	**185**	**0.93**	421	**254**	**1.20**	10.48	Ld
GL90ANc	9.09	1/4	LBP	S	200-220/220-230V 50/60Hz ~1	CSIR	R	C-V	96	134	**185**	**0.93**	421	**254**	**1.20**	10.48	Ld
GLY12NRa	10.70	3/8	LMBP	F	115-127V 60Hz ~1	CSIR	R	C-V	119	168	**234**	**1.02**	531	**320**	**1.33**	10.55	Ld

Green Cooling Models
New Models

(*) Or HF01234yf
(**) Under development

This table continues in the following page

R134a (*) LBP | LMBP • 60 Hz

MODEL	DISPLACEMENT cm³	POWER hp	APPLICATION	CPR COOLING	VOLTAGE FREQUENCY	MOTOR	STARTING	EXPANSION	REFRIGERATION CAPACITY COP in W/W 1 W = 0,864 kcal/h = 3,415 BTU/h Evaporating Temperature ºC							WEIGHT Kg	DESIGN
									Cecomaf (W)					Ashrae			
									-35	-30	-25 W	-25 COP	-10	-23.3 W	-23.3 COP		
GLY12NRb	10.70	3/8	LMBP	F	115-127V 60Hz ~1	CSR	R	C-V	119	168	**234**	**1.07**	531	**320**	**1.39**	10.65	Ld
GP14CG	14.17	3/8	LBP	F	200-220/220-230V 50/60Hz ~1	RSIR	R	C	113	181	**262**	**0.91**	589	**361**	**1.18**	10.62	Pc
GP14FE	14.17	3/8	LBP	F	115V 60Hz ~1	CSIR	R	C-V	119	186	**267**	**0.84**	603	**368**	**1.11**	12.35	Pd
GPY14NDa	14.32	3/8	LMBP	F	115V 60Hz ~1	CSIR	R	C-V	166	234	**322**	**0.90**	715	**440**	**1.17**	12.04	Pd
GPY14NDb	14.32	3/8	LMBP	F	115V 60Hz ~1	CSR	R	C-V	168	235	**324**	**1.02**	722	**442**	**1.26**	12.14	Pd
GPY14NGa	14.32	3/8	LMBP	F	200-220/220-230V 50/60Hz ~1	CSIR	R	C-V	173	241	**330**	**0.98**	728	**450**	**1.27**	12.59	Pd
GPY14NGb	14.32	3/8	LMBP	F	200-220/220-230V 50/60Hz ~1	CSR	R	C-V	173	242	**332**	**1.03**	729	**452**	**1.33**	12.69	Pd

R134a (*) HMBP | HBP • 50 Hz

MODEL	DISPLACEMENT cm³	POWER hp	APPLICATION	CPR COOLING	VOLTAGE FREQUENCY	MOTOR	STARTING	EXPANSION	REFRIGERATION CAPACITY COP in W/W 1 W = 0,864 kcal/h = 3,415 BTU/h Evaporating Temperature ºC							WEIGHT Kg	DESIGN
									Cecomaf (W)					Ashrae			
									-25	-15	5 W	5 COP	10	7.2 W	7.2 COP		
B22G	2.20	1/14	HBP	S/F	220-240V 50Hz ~1	RSIR	P	C-V	-	60	**152**	**1.64**	192	**186**	**1.94**	4.60	Bb
B25G	2.60	1/14	HBP	S/F	220-240V 50/60Hz ~1	RSIR	P	C-V	-	76	**202**	**1.78**	243	**242**	**2.08**	4.65	Bc
B25GL	2.60	1/14	HBP	S	220-240V 50Hz ~1	CSIR	R	C-V	-	81	**186**	**1.81**	235	**228**	**2.16**	5.35	Be
B30G	3.10	1/10	HBP	S/F	220-240V 50Hz ~1	CSIR	R	C-V	-	83	**229**	**1.77**	270	**272**	**2.06**	3.80	Bc
B30G	3.10	1/10	HBP	S/F	220-240V 50Hz ~1	RSIR	P	C-V	-	83	**229**	**1.77**	270	**272**	**2.06**	3.80	Bc
B35GL	3.50	1/8	HBP	S/F	220-240V 50Hz ~1	CSIR	R	C-V	-	100	**262**	**2.00**	321	**316**	**2.34**	6.00	Bf
B35G0	3.50	1/8	HMBP	S	100V 50/60Hz ~1	RSIR	P	C	63	116	**302**	**2.21**	366	**363**	**2.59**	5.89	Be
B38G	3.80	1/8	HBP	S/F	220-240V 50Hz ~1	CSIR	R	C-V	-	129	**291**	**1.91**	347	**347**	**2.23**	5.00	Bc
B38G	3.80	1/8	HBP	S/F	220-240V 50/60Hz ~1	CSIR	R	C-V	-	129	**288**	**1.87**	359	**350**	**2.22**	5.40	Be
B43GL	4.30	1/6	HBP	S/F	220-240V 50Hz ~1	RSIR	P	C-V	-	122	**348**	**1.75**	422	**419**	**2.06**	5.50	Bf
GL45MG	4.56	1/6	HBP	S	230V 50/60Hz ~1	CSIR	R	C-V	-	175	**340**	**1.67**	415	**409**	**1.95**	9.37	Lb
GL45PB	4.56	1/6	HMBP	F	220-240V 50Hz ~1	RSIR	R	C	76	134	**341**	**1.61**	412	**409**	**1.86**	7.76	Lb
GL45TB	4.56	1/6	HMBP	F	220-240V 50Hz ~1	CSIR	R	C-V	76	134	**341**	**1.61**	412	**409**	**1.86**	8.04	Lb
GL45TG	4.56	1/6	HMBP	F	200-240/220-230V 50/60Hz ~1	CSIR	R	C-V	76	134	**341**	**1.67**	412	**409**	**1.95**	8.78	Lb
GLY45RAa	4.56	1/6	HMBP	F	220-240V 50Hz ~1	CSIR	R	C-V	71	139	**373**	**1.93**	452	**448**	**2.25**	8.75	Lb
GLY45RAb	4.56	1/6	HMBP	F	220-240V 50Hz ~1	CSR	R	C-V	71	139	**373**	**2.10**	452	**448**	**2.45**	8.85	Lb
GL60PB	5.68	1/5	HMBP	F	220-240V 50Hz ~1	RSIR	R	C	95	170	**436**	**1.81**	527	**523**	**2.09**	8.34	Lc
GL60TB	5.68	1/5	HMBP	F	220-240V 50Hz ~1	CSIR	R	C-V	95	170	**436**	**1.81**	527	**523**	**2.09**	8.65	Lb
GL60TC	5.68	1/5	HMBP	F	100V 50/60Hz ~1	CSIR	R	C-V	95	170	**436**	**1.72**	527	**523**	**2.01**	10.38	Lb
GL60TG	5.68	1/5	HMBP	F	200-240/220-230V 50/60Hz ~1	CSIR	R	C-V	95	170	**436**	**1.81**	527	**523**	**2.09**	9.07	Lc
GL60MG	5.98	1/5	HBP	S	230V 50/60Hz ~1	CSIR	R	C-V	-	206	**427**	**1.70**	530	**518**	**1.99**	9.00	Lc
GLY60RAa	5.98	1/5	HMBP	F	220-240V 50Hz ~1	CSIR	R	C-V	106	190	**485**	**2.04**	585	**582**	**2.36**	10.47	Lc
GLY60RAb	5.98	1/5	HMBP	F	220-240V 50Hz ~1	CSR	R	C-V	106	190	**485**	**2.24**	585	**582**	**2.60**	10.58	Lc
GUY60RAa	6.00	1/5	HMBP	F	220-240V 50Hz ~1	CSIR	R	C-V	126	221	**540**	**2.32**	646	**644**	**2.70**	9.04	Ub
GUY60RAb	6.00	1/5	HMBP	F	220-240V 50Hz ~1	CSR	R	C-V	126	222	**545**	**2.53**	653	**651**	**2.95**	9.16	Ub
GUY72RCa	7.20	1/4	HMBP	F	100V 50/60Hz ~1	CSIR	R	C-V	153	262	**646**	**2.24**	777	**773**	**2.60**	9.52	Uc
GUY72RCb	7.20	1/4	HMBP	F	100V 50/60Hz ~1	CSR	R	C-V	153	264	**650**	**2.39**	782	**778**	**2.78**	9.59	Uc
GL80MG	7.57	1/5	HBP	S	230V 50/60Hz ~1	CSIR	R	C-V	-	286	**576**	**1.78**	714	**698**	**2.10**	9.53	Lc
GL80PB	7.57	1/5	HMBP	F	220-240V 50Hz ~1	RSIR	R	C	111	212	**553**	**1.81**	667	**663**	**2.10**	8.88	Lc
GL80TB	7.57	1/5	HMBP	F	220-240V 50Hz ~1	CSIR	R	C-V	111	212	**553**	**1.81**	667	**663**	**2.10**	9.19	Lc

Green Cooling Models
New Models

(*) Or HF01234yf
(**) Under development

This table continues in the following page

R134a (*) HMBP | HBP • 50 Hz

MODEL	DISPLACEMENT	POWER	APPLICATION	CPR COOLING	VOLTAGE FREQUENCY	MOTOR	STARTING	EXPANSION	REFRIGERATION CAPACITY COP in W/W 1 W = 0,864 kcal/h = 3,415 BTU/h Evaporating Temperature ºC							WEIGHT	DESIGN
									Cecomaf (W)					Ashrae			
									-25	-15	5		10	7.2			
											W	COP		W	COP		
	cm³	hp														Kg	
GL80TC	7.57	1/5	HMBP	F	100V 50/60Hz ~1	CSIR	R	C-V	111	212	**553**	**1.85**	667	**663**	**2.21**	10.98	Lc
GL80TG	7.57	1/5	HMBP	F	200-220/220-230V 50/60Hz ~1	CSIR	R	C-V	111	212	**553**	**1.81**	667	**663**	**2.10**	9.53	Lc
GLY80RAa	8.10	1/5	HMBP	F	220-240V 50Hz ~1	CSIR	R	C-V	159	275	**680**	**2.16**	818	**814**	**2.51**	10.10	Lc
GLY80RAb	8.10	1/5	HMBP	F	220-240V 50Hz ~1	CSR	R	C-V	159	275	**680**	**2.33**	818	**814**	**2.71**	10.21	Lc
GUY80RAa	8.10	1/4	HMBP	F	220-240V 50Hz ~1	CSIR	R	C-V	174	302	**720**	**2.22**	859	**858**	**2.56**	9.70	Ub
GUY80RAb	8.10	1/4	HMBP	F	220-240V 50Hz ~1	CSR	R	C-V	177	304	**727**	**2.38**	868	**866**	**2.75**	9.80	Ub
GUY90RAa	8.80	1/4	HMBP	F	220-240V 50Hz ~1	CSIR	R	C-V	182	317	**775**	**2.21**	929	**926**	**2.56**	9.70	Ld
GUY90RAb	8.80	1/4	HMBP	F	220-240V 50Hz ~1	CSR	R	C-V	180	319	**783**	**2.35**	938	**935**	**2.73**	9.80	Ld
GL90MG	8.85	1/4	HBP	S	230V 50/60Hz ~1	CSIR	R	C-V	-	328	**661**	**1.79**	810	**797**	**2.10**	10.61	Lc
GL90PB	8.85	1/4	HMBP	F	220-240V 50Hz ~1	RSIR	R	C	143	259	**660**	**1.90**	796	**791**	**2.20**	9.12	Ld
GL90TB	8.85	1/4	HMBP	F	220-240V 50Hz ~1	CSIR	R	C-V	143	259	**660**	**1.90**	796	**791**	**2.20**	9.66	Ld
GL90TC	8.85	1/4	HMBP	F	100V 50/60Hz ~1	CSIR	R	C-V	143	259	**660**	**1.75**	796	**791**	**2.08**	11.48	Lc
GL90TG	8.85	1/4	HMBP	F	200-220/220-230V 50/60Hz ~1	CSIR	R	C-V	143	259	**660**	**1.80**	796	**791**	**2.08**	9.70	Lc
GU80TB	8.10	1/4	HBP	F	220-240V 50Hz ~1	CSIR	R	C-V	-	272	**693**	**1.99**	836	**830**	**2.30**	9.80	Uc
GLY90RAa	9.09	1/4	HMBP	F	220-240V 50Hz ~1	CSIR	R	C-V	169	298	**748**	**2.05**	901	**896**	**2.37**	10.74	Ub
GLY90RAb	9.09	1/4	HMBP	F	220-240V 50Hz ~1	CSR	R	C-V	169	298	**748**	**2.25**	901	**896**	**2.61**	10.84	Ub
GL11TB	9.95	1/3	HMBP	F	220-240V 50Hz ~1	CSIR	R	C-V	190	330	**817**	**1.92**	981	**977**	**2.23**	9.97	Ld
GLY12RAa	10.70	3/8	HBP	F	220-240V 50Hz ~1	CSIR	R	C-V	-	349	**867**	**1.97**	1064	**1047**	**2.30**	10.23	Ld
GLY12RAb	10.70	3/8	HBP	F	220-240V 50Hz ~1	CSR	R	C-V	-	349	**867**	**2.20**	1064	**1047**	**2.57**	10.33	Ld
GLY12RGa	10.70	3/8	HBP	F	200-220/220-230V 50/60Hz ~1	CSIR	R	C-V	-	349	**867**	**1.87**	1064	**1047**	**2.19**	10.43	Ld
GLY12RGb	10.70	3/8	HBP	F	200-220/220-230V 50/60Hz ~1	CSR	R	C-V	-	349	**867**	**1.98**	1064	**1047**	**2.32**	10.53	Ld
GPY12RAa	12.10	3/8	HMBP	F	220-240V 50Hz ~1	CSIR	R	C-V	228	401	**992**	**2.03**	1191	**1186**	**2.35**	13.31	Pd
GPY12RAb	12.10	3/8	HMBP	F	220-240V 50Hz ~1	CSR	R	C-V	228	401	**992**	**2.23**	1191	**1186**	**2.58**	13.42	Pd
GP14TB	14.17	3/8	HBP	F	220-240V 50Hz ~1	CSIR	R	C-V	-	373	**998**	**1.76**	1208	**1198**	**2.03**	11.29	Pd
GP14TG	14.17	3/8	HMBP	F	200-220/220-230V 50/60Hz ~1	CSIR	R	C-V	190	373	**998**	**1.76**	1208	**1198**	**2.03**	11.98	Pd
GPY14RAa	14.32	3/8	HMBP	F	220-240V 50Hz ~1	CSIR	R	C-V	296	492	**1161**	**1.97**	1386	**1384**	**2.27**	12.20	Pd
GPY14RAb	14.32	3/8	HMBP	F	220-240V 50Hz ~1	CSR	R	C-V	296	492	**1161**	**2.16**	1386	**1384**	**2.50**	12.30	Pd
GP16TB	16.15	3/8	HBP	F	220-240V 50Hz ~1	CSIR	R	C-V	-	476	**1204**	**1.80**	1451	**1442**	**2.09**	11.93	Pd
GP16TG	16.15	3/8	HBP	F	200-220/230V 50/60Hz ~1	CSIR	R	C-V	-	476	**1204**	**1.81**	1451	**1442**	**2.09**	11.93	Pd
GPM16RA	16.15	1/2	HBP	F	220-240V 50Hz ~1	CSIR	R	C-V	-	543	**1317**	**1.79**	1574	**1571**	**2.09**	12.29	Pd
GPT16RG	16.15	1/2	HBP	F	200-220/220-230V 50/60Hz ~1	CSR	R	C-V	-	552	**1323**	**2.13**	1600	**1586**	**2.50**	12.16	Pd
GPY16RAa	16.15	1/2	HMBP	F	220-240V 50Hz ~1	CSIR	R	C-V	307	542	**1317**	**2.02**	1574	**1571**	**2.34**	12.84	Pd
GPY16RAb	16.15	1/2	HMBP	F	220-240V 50Hz ~1	CSR	R	C-V	307	542	**1317**	**2.15**	1574	**1571**	**2.50**	12.94	Pd
GPT18RA	18.00	1/2	HBP	F	220-240V 50Hz ~1	CSR	R	C-V	-	618	**1482**	**2.06**	1783	**1774**	**2.39**	12.68	Pd
GPT18RG	18.00	1/2	HBP	F	200-220/230V 50/60Hz ~1	CSR	R	C-V	-	602	**1443**	**2.04**	1745	**1731**	**2.37**	12.84	Pd
GX18TB	18.40	1/2	HMBP	F	220-240V 50Hz ~1	CSIR	R	C-V	286	539	**1389**	**1.90**	1673	**1663**	**2.20**	15.44	Xc
GX18TG	18.40	1/2	HMBP	F	200-220/220-230V 50/60Hz ~1	CSIR	R	C-V	286	539	**1389**	**1.90**	1673	**1663**	**2.20**	16.08	Xc
GX21TB	20.72	5/8	HMBP	F	220-240V 50Hz ~1	CSIR	R	C-V	323	603	**1549**	**1.88**	1866	**1855**	**2.18**	16.13	Xd
GX23TB	23.20	5/8	HMBP	F	220-240V 50Hz ~1	CSIR	R	C-V	368	677	**1729**	**1.88**	2082	**2070**	**2.18**	16.33	Xd
GX23TG	23.20	5/8	HMBP	F	200-220/220-230V 50/60Hz ~1	CSIR	R	C-V	368	677	**1729**	**1.79**	2082	**2070**	**2.08**	16.34	Xd
GS26T3	25.93	3/4	HMBP	F	400/440V 50/60Hz ~3	3PHASE	P	C-V	265	703	**2070**	**2.19**	2514	**2489**	**2.55**	22.70	Sc
GS26TB	25.93	3/4	HMBP	F	220-240V 50Hz ~1	CSIR	R	C-V	265	703	**2070**	**2.08**	2514	**2489**	**2.42**	22.70	Sc
GS26TG	25.93	3/4	HMBP	F	200-220/220-230V 50/60Hz ~1	CSIR	R	C-V	265	703	**2070**	**2.14**	2514	**2489**	**2.49**	22.70	Sc
GS30TB	29.95	7/8	HMBP	F	220-240V 50Hz ~1	CSR	R	C-V	317	785	**2451**	**2.31**	3019	**2966**	**2.70**	22.70	Sd
GS30TG	29.95	7/8	HMBP	F	200-220/220-230V 50/60Hz ~1	CSR	R	C-V	317	785	**2451**	**2.31**	3019	**2966**	**2.70**	23.00	Sd
GS34TB	34.42	1	HMBP	F	220-240V 50Hz ~1	CSR	R	C-V	476	1068	**2850**	**2.26**	3420	**3408**	**2.62**	21.37	Sd
GS34TG	34.42	1	HMBP	F	200-220/220-230V 50/60Hz ~1	CSR	R	C-V	467	992	**2829**	**2.24**	3453	**3409**	**2.64**	22.27	Sd

Green Cooling Models
New Models

(*) Or HFO1234yf
(**) Under development

R134a (*) HMBP | HBP • 60 Hz

MODEL	DISPLACEMENT	POWER	APPLICATION	CPR COOLING	VOLTAGE FREQUENCY	MOTOR	STARTING	EXPANSION	REFRIGERATION CAPACITY COP in W/W 1 W = 0,864 kcal/h = 3,415 BTU/h Evaporating Temperature ºC							WEIGHT	DESIGN
									Cecomaf (W)					Ashrae			
									-25	-15	5		10	7.2			
	cm³	hp									W	COP		W	COP	Kg	
B22G5	2.20	1/16	HBP	S/F	110-115V 60Hz ~1	RSIR	P	C-V	-	72	**188**	**1.83**	229	**226**	**2.13**	4.80	Bb
B25G	2.60	1/14	HBP	S/F	220-240V 50/60Hz ~1	RSIR	P	C-V	-	86	**224**	**1.80**	274	**269**	**2.10**	4.65	Bc
B25G5L	2.60	1/14	HBP	S/F	115V 60Hz ~1	CSIR	R	C-V	-	74	**231**	**1.93**	283	**279**	**2.28**	5.35	Be
B30G5	3.10	1/10	HBP	S/F	110-115V 60Hz ~1	RSIR	R	C-V	-	101	**262**	**1.79**	317	**314**	**2.08**	4.80	Bc
B35G5	3.50	1/10	HBP	S/F	110-115V 60Hz ~1	CSIR	R	C-V	-	120	**304**	**1.80**	371	**366**	**2.12**	4.90	Bc
B35G0	3.50	1/8	HMBP	S	100V 50/60Hz ~1	RSIR	P	C	84	138	**352**	**2.23**	428	**423**	**2.60**	5.89	Be
B38G	3.80	1/8	HBP	S/F	220-240V 50/60Hz ~1	CSIR	R	C-V	-	150	**339**	**1.98**	410	**406**	**2.31**	5.40	Be
B38G5L	3.80	1/8	HBP	S/F	110-115V 60Hz ~1	CSIR	R	C-V	-	136	**353**	**1.83**	424	**422**	**2.13**	5.50	Be
GL45PE	4.56	1/6	HMBP	F	115V 60Hz ~1	RSIR	R	C	89	157	**400**	**1.59**	483	**479**	**1.84**	8.87	Lb
GL45TE	4.56	1/6	HMBP	F	115V 60Hz ~1	CSIR	R	C-V	89	157	**400**	**1.59**	483	**479**	**1.84**	9.18	Lb
GL45TG	4.56	1/6	HMBP	F	200-240/220-230V 50/60Hz ~1	CSIR	R	C-V	89	157	**400**	**1.65**	483	**479**	**1.92**	8.78	Lb
GL45MG	4.56	1/6	HBP	S	230V 50/60Hz ~1	CSIR	R	C-V	-	204	**398**	**1.65**	487	**479**	**1.92**	9.37	Lc
GL60PE	5.68	1/5	HMBP	F	115V 60Hz ~1	RSIR	R	C	111	199	**510**	**1.73**	616	**612**	**2.01**	9.97	Lc
GL60TC	5.68	1/5	HMBP	F	100V 50/60Hz ~1	CSIR	R	C-V	111	199	**510**	**1.74**	616	**612**	**2.01**	10.38	Lc
GL60TE	5.68	1/5	HMBP	F	115V 60Hz ~1	CSIR	R	C-V	111	199	**510**	**1.73**	616	**612**	**2.01**	10.28	Lc
GL60TG	5.68	1/5	HMBP	F	200-240/220-230V 50/60Hz ~1	CSIR	R	C-V	111	199	**510**	**1.76**	616	**612**	**2.04**	9.07	Lc
GL60MG	5.98	1/5	HBP	S	230V 50/60Hz ~1	CSIR	R	C-V	-	243	**499**	**1.73**	619	**605**	**2.02**	9.00	Lc
GUY72RCa	7.20	1/4	HMBP	F	100V 50/60Hz ~1	CSIR	R	C-V	184	319	**765**	**2.18**	913	**912**	**2.51**	9.52	Uc
GUY72RCb	7.20	1/4	HMBP	F	100V 50/60Hz ~1	CSR	R	C-V	181	318	**772**	**2.35**	923	**921**	**2.72**	9.59	Uc
GL80PE	7.57	1/5	HMBP	F	115V 60Hz ~1	RSIR	R	C	130	248	**647**	**1.78**	781	**776**	**2.04**	9.97	Lc
GL80TC	7.57	1/5	HMBP	F	100V 50/60Hz ~1	CSIR	R	C-V	130	248	**647**	**1.92**	781	**776**	**2.22**	10.98	Lc
GL80TE	7.57	1/5	HMBP	F	115V 60Hz ~1	CSIR	R	C-V	130	248	**647**	**1.78**	781	**776**	**2.04**	10.68	Lc
GL80TG	7.57	1/5	HMBP	F	200-220/220-230V 50/60Hz ~1	CSIR	R	C-V	130	248	**647**	**1.78**	781	**776**	**2.04**	9.53	Lc
GL80MG	7.57	1/5	HBP	S	230V 50/60Hz ~1	CSIR	R	C-V	-	344	**674**	**1.84**	836	**816**	**2.15**	9.53	Lc
GLY80RDa	8.10	1/5	HMBP	F	115V 60Hz ~1	CSIR	R	C-V	169	299	**775**	**2.02**	939	**930**	**2.34**	9.74	Lc
GLY80RDb	8.10	1/5	HMBP	F	115V 60Hz ~1	CSR	R	C-V	169	299	**775**	**2.17**	939	**930**	**2.51**	9.85	Lc
GL90MG	8.85	1/4	HBP	S	230V 50/60Hz ~1	CSIR	R	C-V	-	391	**772**	**1.83**	947	**930**	**2.11**	10.61	Ld
GL90PE	8.85	1/4	HMBP	F	115V 60Hz ~1	RSIR	R	C	167	303	**773**	**1.78**	932	**926**	**2.06**	11.27	Ld
GL90TC	8.85	1/4	HMBP	F	100V 50/60Hz ~1	CSIR	R	C-V	167	303	**773**	**1.82**	932	**926**	**2.10**	11.48	Ld
GL90TE	8.85	1/4	HMBP	F	115V 60Hz ~1	CSIR	R	C-V	167	303	**773**	**1.78**	932	**926**	**2.06**	9.75	Ld
GL90TG	8.85	1/4	HMBP	F	200-220/220-230V 50/60Hz ~1	CSIR	R	C-V	168	303	**773**	**1.71**	932	**926**	**1.97**	9.70	Ld
GLY90RDa	9.09	1/4	HMBP	F	115V 60Hz ~1	CSIR	R	C-V	198	348	**874**	**1.95**	1053	**1047**	**2.25**	10.59	Lc
GLY90RDb	9.09	1/4	HMBP	F	115V 60Hz ~1	CSR	R	C-V	198	348	**874**	**2.10**	1053	**1047**	**2.42**	10.69	Lc
GLY12RGa	10.70	3/8	HBP	F	200-220/220-230V 50/60Hz ~1	CSIR	R	C-V	-	405	**1007**	**1.90**	1216	**1207**	**2.22**	10.43	Ld
GLY12RGb	10.70	3/8	HBP	F	200-220/220-230V 50/60Hz ~1	CSR	R	C-V	-	405	**1007**	**2.07**	1216	**1207**	**2.40**	10.53	Ld
GLY12RRa	10.70	3/8	HMBP	F	115-127V 60Hz ~1	CSIR	R	C-V	222	402	**1015**	**1.90**	1221	**1214**	**2.20**	11.14	Ld
GLY12RRb	10.70	3/8	HMBP	F	115-127V 60Hz ~1	CSR	R	C-V	222	402	**1015**	**2.01**	1221	**1214**	**2.32**	11.24	Ld
GPY12RDa	12.10	3/8	HMBP	F	115V 60Hz ~1	CSIR	R	C-V	280	480	**1150**	**1.95**	1375	**1372**	**2.25**	12.03	Pd
GPY12RDb	12.10	3/8	HMBP	F	115V 60Hz ~1	CSR	R	C-V	280	480	**1150**	**2.11**	1375	**1372**	**2.44**	12.13	Pd
GP14TG	14.17	3/8	HMBP	F	200-220/220-230V 50/60Hz ~1	CSIR	R	C-V	222	437	**1168**	**1.76**	1413	**1401**	**2.03**	11.98	Pd
GPY14RDa	14.32	1/2	HBP	F	115V 60Hz ~1	CSIR	R	C-V	-	515	**1410**	**1.90**	1738	**1706**	**2.22**	12.03	Pd
GPY14RDb	14.32	1/2	HBP	F	115V 60Hz ~1	CSR	R	C-V	-	515	**1410**	**2.02**	1738	**1706**	**2.36**	12.13	Pd
GP16TE	16.15	3/8	HBP	F	115V 60Hz ~1	CSIR	R	C-V	-	556	**1408**	**1.69**	1697	**1686**	**1.96**	12.20	Pd
GP16TG	16.15	3/8	HBP	F	200-220/230V 50/60Hz ~1	CSIR	R	C-V	-	556	**1408**	**1.74**	1697	**1686**	**2.00**	11.93	Pd
GPT16RG	16.15	1/2	HBP	F	200-220/220-230V 50/60Hz ~1	CSR	R	C-V	-	650	**1515**	**2.02**	1827	**1814**	**2.33**	12.16	Pd

Green Cooling Models
New Models

(*) Or HFO1234yf
(**) Under development

This table continues in the following page

R134a (*) HMBP | HBP • 60 Hz

	MODEL	DISPLACEMENT	POWER	APPLICATION	CPR COOLING	VOLTAGE FREQUENCY	MOTOR	STARTING	EXPANSION	REFRIGERATION CAPACITY COP in W/W 1 W = 0,864 kcal/h = 3,415 BTU/h Evaporating Temperature ºC							WEIGHT	DESIGN
										Cecomaf (W)					Ashrae			
												5			7.2			
		cm³	hp							-25	-15	W	COP	10	W	COP	Kg	
	GPY16RDa	16.15	1/2	HBP	F	115V 60Hz ~1	CSIR	R	C-V	-	614	**1518**	**1.88**	1822	**1814**	**2.17**	12.05	Pd
	GPY16RDb	16.15	1/2	HBP	F	115V 60Hz ~1	CSR	R	C-V	-	614	**1518**	**2.00**	1822	**1814**	**2.31**	12.15	Pd
	GPT18RG	18.00	1/2	HBP	F	200-220/230V 50/60Hz ~1	CSR	R	C-V	-	693	**1640**	**1.90**	1979	**1964**	**2.20**	12.84	Pd
	GX18TG	18.40	1/2	HMBP	F	200-220/220-230V 50/60Hz ~1	CSIR	R	C-V	333	630	**1625**	**1.87**	1957	**1946**	**2.17**	16.08	Xc
	GX23TG	23.20	5/8	HMBP	F	200-220/220-230V 50/60Hz ~1	CSIR	R	C-V	429	792	**2021**	**1.71**	2433	**2419**	**1.98**	16.34	Xd
	GX23TF (*)	23.20	5/8	HMBP	F	208-230V 60Hz ~1	CSIR	R	C-V	429	792	**2021**	**1.71**	2433	**2419**	**1.98**	16.34	Xd
	GS26T3	25.93	3/4	HMBP	F	400/440V 50/60Hz ~3	3PHASE	P	C-V	307	824	**2419**	**2.07**	2935	**2908**	**2.40**	22.70	Sc
	GS26TG	25.93	3/4	HMBP	F	200-220/220-230V 50/60Hz ~1	CSIR	R	C-V	307	824	**2419**	**2.06**	2935	**2908**	**2.40**	22.70	Sc
	GS30TG	29.95	7/8	HMBP	F	200-220/220-230V 50/60Hz ~1	CSR	R	C-V	370	920	**2865**	**2.23**	3527	**3466**	**2.61**	23.00	Sd
	GS34TF	34.42	1	HMBP	F	220-230V 60Hz ~1	CSR	R	C-V	550	1247	**3327**	**2.17**	3990	**3977**	**2.50**	22.70	Sd
	GS34TG	34.42	1	HMBP	F	200-220/220-230V 50/60Hz ~1	CSR	R	C-V	440	1093	**3248**	**2.11**	3963	**3913**	**2.44**	22.27	Sd

Green Cooling Models
New Models

(*) Or HF01234yf
(**) Under development

	Conditions			
	CECOMAF		ASHRAE	
	LBP (A)	HMBP/HBP (C)	LBP (B)	HMBP/HBP (D)
Evaporating temperature ºC	-25	5	-23.3	7.2
Condensing temperature ºC	55	55	55	55
Liquid temperature ºC	55	55	32	46
Suction temperature ºC	32	32	32	35
Ambient temperature ºC	32	32	32	35

Measurement conversion
R134a
W (A) x 1.37 = W (B)
W (C) x 1.19 = W (D)

S compressor's range can be provided with tube or valve

3.

Compressors Catalogue

R404A/R507

R404A • R507 (*) LBP • 50 Hz

MODEL	DISPLACEMENT	POWER	APPLICATION	CPR COOLING	VOLTAGE FREQUENCY	MOTOR	STARTING	EXPANSION	REFRIGERATION CAPACITY COP in W/W 1 W = 0,864 kcal/h = 3,415 BTU/h Evaporating Temperature ºC							WEIGHT	DESIGN
											Cecomaf (W)			Ashrae			
											-25			-23.3			
	cm³	hp							-40	-30	W	COP	-10	W	COP	Kg	
ML45FB	4.56	1/6	LBP	F	220-240V 50Hz ~1	CSIR	R	C-V	52	100	**133**	**0.66**	274	**198**	**0.94**	8.57	Lb
ML45FG	4.56	1/6	LBP	F	200-240/220-230V 50/60Hz ~1	CSIR	R	C-V	52	100	**133**	**0.68**	274	**198**	**0.96**	10.87	Lc
MLY45LAa	4.56	1/6	LBP	F	220-240V 50Hz ~1	CSIR	R	C-V	61	118	**157**	**0.92**	317	**233**	**1.30**	9.55	Lc
MLY45LAb	4.56	1/6	LBP	F	220-240V 50Hz ~1	CSR	R	C-V	61	118	**157**	**0.98**	317	**233**	**1.38**	9.65	Lc
ML60FB	5.98	1/5	LBP	F	220-240V 50Hz ~1	CSIR	R	C-V	73	140	**186**	**0.86**	371	**275**	**1.20**	8.84	Lc
ML60FBa (*)	5.98	1/5	LBP	F	220-240V 50Hz ~1	RSIR	P	C	73	140	**186**	**0.86**	371	**275**	**1.20**	8.84	Lc
ML60FG	5.98	1/5	LBP	F	200-240/220-230V 50/60Hz ~1	CSIR	R	C-V	69	134	**177**	**0.71**	351	**262**	**1.01**	10.87	Lc
MLY60LAa	5.98	1/5	LBP	F	220-240V 50Hz ~1	CSIR	R	C-V	86	168	**221**	**0.90**	428	**326**	**1.26**	10.02	Lc
MLY60LAb	5.98	1/5	LBP	F	220-240V 50Hz ~1	CSR	R	C-V	86	168	**221**	**0.96**	428	**326**	**1.36**	10.12	Lc
ML80FB	8.10	1/4	LBP	F	220-240V 50Hz ~1	CSIR	R	C-V	99	189	**251**	**0.77**	505	**371**	**1.09**	9.47	Lc
ML80FG	8.10	1/4	LBP	F	200-220/220-230V 50/60Hz ~1	CSIR	R	C-V	99	190	**252**	**0.77**	505	**372**	**1.08**	12.20	Ld
MLY80LAa	8.10	1/4	LBP	F	220-240V 50Hz ~1	CSIR	R	C-V	104	207	**275**	**0.91**	548	**407**	**1.28**	9.59	Ld
MLY80LAb	8.10	1/4	LBP	F	220-240V 50Hz ~1	CSR	R	C-V	104	207	**275**	**0.98**	548	**407**	**1.38**	9.69	Ld
ML90FB	8.85	1/3	LBP	F	220-240V 50Hz ~1	CSIR	R	C-V	104	207	**275**	**0.83**	548	**407**	**1.16**	9.59	Ld
ML90FBa	8.85	1/3	LBP	F	220-240V 50Hz ~1	RSIR	P	C	104	207	**275**	**0.83**	548	**407**	**1.16**	9.59	Ld
ML90FG	8.85	1/3	LBP	F	200-220/230V 50/60Hz ~1	CSIR	R	C-V	104	207	**275**	**0.80**	548	**407**	**1.13**	10.78	Ld
MLY90LAa	9.09	1/3	LBP	F	220-240V 50Hz ~1	CSIR	R	C-V	121	236	**311**	**0.91**	612	**460**	**1.28**	10.35	Ld
MLY90LAb	9.09	1/3	LBP	F	220-240V 50Hz ~1	CSR	R	C-V	121	236	**311**	**0.98**	612	**460**	**1.38**	10.45	Ld
MLY12LAa	10.70	3/8	LBP	F	220-240V 50Hz ~1	CSIR	R	C-V	156	294	**387**	**0.94**	762	**570**	**1.33**	11.18	Ld
MLY12LAb	10.70	3/8	LBP	F	220-240V 50Hz ~1	CSR	R	C-V	156	294	**387**	**1.00**	762	**570**	**1.41**	11.28	Ld
MLY12LGa	10.70	3/8	LBP	F	200-220/230V 50/60Hz ~1	CSIR	R	C-V	165	297	**387**	**0.83**	756	**570**	**1.17**	11.06	Ld
MLY12LGb	10.70	3/8	LBP	F	200-220/230V 50/60Hz ~1	CSR	R	C-V	165	302	**394**	**0.90**	768	**581**	**1.28**	11.16	Ld
MPT12LA	12.10	3/8	LBP	F	220-240V 50Hz ~1	CSR	R	C-V	194	347	**451**	**1.01**	873	**663**	**1.42**	12.23	Pd
MP14FB	14.17	1/2	LBP	F	220-240V 50Hz ~1	CSIR	R	C-V	121	304	**421**	**0.79**	877	**629**	**1.12**	12.07	Pd
MP14FG	14.17	1/2	LBP	F	200-220/230V 50/60Hz ~1	CSIR	R	C-V	121	303	**420**	**0.79**	877	**627**	**1.12**	12.03	Pd
MPT14LA	14.32	1/2	LBP	F	220-240V 50Hz ~1	CSR	R	C-V	242	419	**534**	**0.99**	984	**780**	**1.38**	12.25	Pd
MPT16LA	16.15	1/2	LBP	F	220-240V 50Hz ~1	CSR	R	C-V	245	462	**605**	**1.00**	1168	**890**	**1.40**	12.37	Pd
MPT18LA	18.00	1/2	LBP	F	220-240V 50Hz ~1	CSR	R	C-V	269	504	**657**	**0.96**	1260	**966**	**1.35**	12.81	Pd
MX18FBa	18.40	5/8	LBP	F	220-240V 50Hz ~1	CSR	R	C-V	173	396	**546**	**0.96**	1147	**815**	**1.36**	16.29	Xd
MX21FBa	20.72	3/4	LBP	F	220-240V 50Hz ~1	CSR	R	C-V	212	463	**630**	**0.96**	1296	**937**	**1.35**	16.66	Xd
MX21FGa	20.72	3/4	LBP	F	200-220/220-230V 50/60Hz ~1	CSR	R	C-V	212	463	**630**	**0.96**	1296	**937**	**1.35**	16.76	Xd
MX23FBa	23.20	7/8	LBP	F	220-240V 50Hz ~1	CSR	R	C-V	259	534	**718**	**0.96**	1455	**1065**	**1.35**	16.61	Xd
MX23FGa	23.20	7/8	LBP	F	200-220/220-230V 50/60Hz ~1	CSR	R	C-V	259	534	**718**	**0.95**	1455	**1065**	**1.34**	16.74	Xd
MS26F3	25.93	3/4	LBP	F	400/440V 50/60Hz ~3	3PHASE	P	C-V	173	548	**777**	**0.95**	1626	**1164**	**1.35**	20.80	Sd
MS26FB	25.93	3/4	LBP	F	220-240V 50Hz ~1	CSR	R	C-V	182	571	**814**	**0.97**	1737	**1222**	**1.37**	21.63	Sd
MS26FG	25.93	3/4	LBP	F	200-220/230V 50/60Hz ~1	CSR	R	C-V	173	547	**775**	**0.95**	1626	**1162**	**1.35**	22.11	Sd
MS30F3	29.95	7/8	LBP	F	400/440V 50/60Hz ~3	3PHASE	P	C-V	207	655	**931**	**0.93**	1968	**1397**	**1.32**	24.00	Sd
MS30FB	29.95	7/8	LBP	F	220-240V 50Hz ~1	CSR	R	C-V	207	656	**932**	**0.95**	1969	**1398**	**1.35**	22.70	Sd
MS34F3	34.42	1	LBP	F	400/440V 50/60Hz ~3	3PHASE	P	C-V	242	762	**1085**	**0.99**	2311	**1630**	**1.40**	22.90	Sd
MS34FB	34.42	1	LBP	F	220-240V 50Hz ~1	CSR	R	C-V	242	759	**1083**	**0.95**	2311	**1626**	**1.35**	22.13	Sd
MS38FB (**)	38.00	1 1/2	LBP	F	220-240V 50Hz ~1	CSR	R	C-V	263	826	**1178**	**0.94**	2513	**1769**	**1.34**	22.10	Sd

Green Cooling Models
New Models

(*) Or R407B / R452A
(**) Under development

R404A • R507 (*) LBP • 60 Hz

MODEL	DISPLACEMENT	POWER	APPLICATION	CPR COOLING	VOLTAGE FREQUENCY	MOTOR	STARTING	EXPANSION	REFRIGERATION CAPACITY COP in W/W 1 W = 0,864 kcal/h = 3,415 BTU/h Evaporating Temperature ºC							WEIGHT	DESIGN
											Cecomaf (W)			Ashrae			
											-25			-23.3			
	cm³	hp							-40	-30	W	COP	-10	kcal/h	COP	Kg	
ML45FG	4.56	1/6	LBP	F	200-240/220-230V 50/60Hz ~1	CSIR	R	C-V	61	117	**157**	**0.68**	321	**233**	**0.97**	10.87	Lc
ML45FR	4.56	1/6	LBP	F	115-127V 60Hz ~1	CSIR	R	C-V	61	117	**157**	**0.72**	321	**233**	**1.01**	9.21	Lc
MLY45LRa	4.56	1/6	LBP	F	115-127V 60Hz ~1	CSIR	R	C-V	64	143	**192**	**0.87**	379	**284**	**1.23**	9.20	Lc
MLY45LRb	4.56	1/6	LBP	F	115-127V 60Hz ~1	CSR	R	C-V	64	143	**192**	**0.90**	379	**284**	**1.27**	9.30	Lc
ML60FG	5.98	1/5	LBP	F	200-240/220-230V 50/60Hz ~1	CSIR	R	C-V	81	157	**207**	**0.70**	411	**306**	**0.99**	10.87	Lc
ML60FR	5.98	1/5	LBP	F	115-127V 60Hz ~1	CSIR	R	C-V	81	157	**207**	**0.72**	411	**306**	**1.01**	9.54	Lc
MLY60LDa	5.98	1/5	LBP	F	115V 60Hz ~1	CSIR	R	C-V	102	197	**259**	**0.89**	501	**381**	**1.25**	10.40	Lc
MLY60LDb	5.98	1/5	LBP	F	115V 60Hz ~1	CSR	R	C-V	102	197	**259**	**0.95**	501	**381**	**1.34**	10.50	Lc
ML80FG	8.10	1/4	LBP	F	200-220/220-230V 50/60Hz ~1	CSIR	R	C-V	117	223	**296**	**0.76**	590	**437**	**1.07**	12.20	Ld
ML80FR	8.10	1/4	LBP	F	115-127V 60Hz ~1	CSIR	R	C-V	117	223	**296**	**0.75**	590	**437**	**1.05**	11.97	Ld
ML90FG	8.85	1/3	LBP	F	200-220/230V 50/60Hz ~1	CSIR	R	C-V	121	242	**323**	**0.80**	642	**477**	**1.12**	10.78	Ld
ML90FR	8.85	1/3	LBP	F	115-127V 60Hz ~1	CSIR	R	C-V	121	242	**323**	**0.79**	642	**477**	**1.11**	11.97	Ld
MLT90CD	9.09	1/3	LBP	F	115V 60Hz ~1	RSCR	P	C	164	290	**382**	**1.03**	770	**564**	**1.45**	11.40	Ld
MLT90CDc	9.09	1/3	LBP	S	115V 60Hz ~1	CSR	R	C-V	159	284	**373**	**0.99**	750	**551**	**1.40**	11.55	Ld
MLT90LD	9.09	1/4	LBP	F	115V 60Hz ~1	CSR	R	C-V	159	284	**373**	**0.99**	750	**551**	**1.40**	11.80	Ld
MLY12LFa	10.70	3/8	LBP	F	208-230V 60Hz ~1	CSIR	R	C-V	179	343	**451**	**0.92**	882	**665**	**1.29**	11.06	Ld
MLY12LFb	10.70	3/8	LBP	F	208-230V 60Hz ~1	CSR	R	C-V	179	343	**451**	**0.94**	882	**665**	**1.33**	11.16	Ld
MLY12LGa	10.70	3/8	LBP	F	200-220/230V 50/60Hz ~1	CSIR	R	C-V	190	351	**458**	**0.86**	884	**673**	**1.22**	11.06	Ld
MLY12LGb	10.70	3/8	LBP	F	200-220/230V 50/60Hz ~1	CSR	R	C-V	190	357	**466**	**0.91**	889	**684**	**1.29**	11.16	Ld
MLY12LRa	10.70	3/8	LBP	F	115-127V 60Hz ~1	CSIR	R	C-V	199	373	**478**	**0.96**	866	**698**	**1.34**	11.01	Ld
MLY12LRb	10.70	3/8	LBP	F	115-127V 60Hz ~1	CSR	R	C-V	200	369	**476**	**1.00**	890	**698**	**1.41**	11.11	Ld
MPT12CD	12.10	3/8	LBP	F	115V 60Hz ~1	RSCR	P	C	225	397	**515**	**1.01**	993	**756**	**1.41**	12.35	Pd
MPT12LD	12.10	3/8	LBP	F	115V 60Hz ~1	CSR	R	C-V	225	397	**515**	**1.01**	993	**756**	**1.41**	11.50	Pd
MP14FG	14.17	1/2	LBP	F	200-220/230V 50/60Hz ~1	CSIR	R	C-V	142	355	**492**	**0.82**	1026	**734**	**1.15**	12.03	Pd
MPT14LD	14.32	1/2	LBP	F	115V 60Hz ~1	CSR	R	C-V	258	453	**590**	**0.96**	1156	**868**	**1.35**	12.20	Pd
MPT14LF	14.32	1/2	LBP	F	208-230V 60Hz ~1	CSR	R	C-V	262	474	**621**	**0.96**	1223	**914**	**1.36**	12.30	Pd
MPT16LD	16.10	1/2	LBP	F	115V 60Hz ~1	CSR	R	C-V	269	509	**666**	**0.95**	1285	**979**	**1.33**	12.65	Pd
MX21FGa	20.72	3/4	LBP	F	200-220/220-230V 50/60Hz ~1	CSR	R	C-V	247	540	**735**	**0.94**	1515	**1093**	**1.32**	16.76	Xd
MX21FR	20.72	3/4	LBP	F	115-127V 60Hz ~1	CSR	R	C-V	247	627	**768**	**0.98**	1001	**1093**	**1.32**	17.71	Xd
MX23FGa	23.20	7/8	LBP	F	200-220/220-230V 50/60Hz ~1	CSR	R	C-V	303	627	**843**	**0.93**	1711	**1250**	**1.32**	16.74	Xd
MS26F3	25.93	3/4	LBP	F	400/440V 50/60Hz ~3	3PHASE	P	C-V	202	641	**909**	**0.92**	1902	**1361**	**1.31**	20.80	Xd
MS26FF	25.93	3/4	LBP	F	208-230V 60Hz ~1	CSR	R	C-V	202	641	**909**	**0.91**	1902	**1361**	**1.30**	22.60	Sd
MS26FG	25.93	3/4	LBP	F	200-220/230V 50/60Hz ~1	CSR	R	C-V	202	640	**907**	**0.92**	1902	**1358**	**1.31**	22.11	Sd
MS30F3	29.95	7/8	LBP	F	400/440V 50/60Hz ~3	3PHASE	P	C-V	242	763	**1086**	**0.94**	2302	**1628**	**1.32**	24.00	Sd
MS30FF	29.95	7/8	LBP	F	208-230V 60Hz ~1	CSR	R	C-V	242	763	**1086**	**0.92**	2302	**1628**	**1.31**	22.70	Sd
MS30FG	29.95	7/8	LBP	F	230V 60Hz ~1	CSR	R	C-V	242	763	**1086**	**0.95**	2302	**1628**	**1.36**	22.70	Sd
MS34F3	34.42	1	LBP	F	400/440V 50/60Hz ~3	3PHASE	P	C-V	277	885	**1263**	**0.96**	2696	**1896**	**1.35**	22.90	Sd
MS34FF	34.42	1	LBP	F	208V 60Hz ~1	CSR	R	C-V	272	838	**1216**	**0.91**	2738	**1838**	**1.30**	22.90	Sd

Green Cooling Models
New Models

(*) Or R407B / R452A
(**) Under development

R404A • R507 (*) HMBP | HBP • 50 Hz

MODEL	DISPLACEMENT	POWER	APPLICATION	CPR COOLING	VOLTAGE FREQUENCY	MOTOR	STARTING	EXPANSION	REFRIGERATION CAPACITY COP in W/W 1 W = 0,864 kcal/h = 3,415 BTU/h Evaporating Temperature ºC							WEIGHT	DESIGN
											Cecomaf (W)			Ashrae			
											5			7.2			
	cm³	hp							-25	-15	W	COP	10	W	COP	Kg	
ML40TB	4.05	1/6	HMBP	F	220-240V 50Hz ~1	CSIR	R	C-V	132	212	**470**	**1.41**	555	**593**	**1.74**	9.47	Lc
ML40TG	4.05	1/6	HMBP	F	200-240/220-230V 50/60Hz ~1	CSIR	R	C-V	132	212	**470**	**1.41**	555	**593**	**1.74**	9.12	Lc
ML45TB	4.56	1/5	HMBP	F	220-240V 50Hz ~1	CSIR	R	C-V	150	237	**525**	**1.47**	621	**663**	**1.82**	9.10	Lc
ML45TG	4.50	1/6	HMBP	F	200-240/220-230V 50/60Hz ~1	CSIR	R	C-V	160	261	**572**	**1.59**	673	**721**	**1.95**	9.14	Lc
MLT45RG	4.56	1/5	HMBP	F	200-220/230V 50/60Hz ~1	CSR	R	C-V	160	262	**591**	**1.91**	699	**747**	**2.36**	9.75	Ld
ML60TB	5.68	1/4	HMBP	F	220-240V 50Hz ~1	CSIR	R	C-V	165	276	**643**	**1.50**	765	**814**	**1.85**	9.29	Lc
ML60TG	5.68	1/4	HMBP	F	200-220/230V 50/60Hz ~1	CSIR	R	C-V	165	276	**643**	**1.50**	765	**814**	**1.85**	10.57	Lc
MLY60RAa	5.98	1/4	HMBP	F	220-240V 50Hz ~1	CSIR	R	C-V	210	344	**761**	**1.74**	896	**959**	**2.15**	10.49	Lc
MLY60RAb	5.98	1/4	HMBP	F	220-240V 50Hz ~1	CSR	R	C-V	210	344	**761**	**1.91**	896	**959**	**2.36**	10.59	Lc
MLY60RGa	5.98	1/4	HMBP	F	200-220/220-230V 50/60Hz ~1	CSIR	R	C-V	215	341	**765**	**1.85**	907	**968**	**2.29**	10.24	Lc
MLY60RGb	5.98	1/4	HMBP	F	200-220/220-230V 50/60Hz ~1	CSR	R	C-V	216	352	**778**	**2.00**	916	**980**	**2.48**	10.34	Lc
ML80TB	7.57	3/8	HMBP	F	220-240V 50Hz ~1	CSIR	R	C-V	225	383	**875**	**1.61**	1034	**1105**	**1.99**	9.68	Ld
ML80TG	7.57	3/8	HMBP	F	200-240/220-230V 50/60Hz ~1	CSIR	R	C-V	225	383	**875**	**1.61**	1034	**1105**	**1.99**	11.81	Ld
MLY80RAa	8.10	3/8	HMBP	F	220-240V 50Hz ~1	CSIR	R	C-V	280	461	**1049**	**1.84**	1243	**1326**	**2.27**	11.29	Ld
MLY80RAb	8.00	3/8	HMBP	F	220-240V 50Hz ~1	CSR	R	C-V	280	461	**1049**	**1.99**	1243	**1326**	**2.46**	11.39	Ld
ML90TB	8.85	3/8	HMBP	F	220-240V 50Hz ~1	CSIR	R	C-V	280	461	**1049**	**1.61**	1243	**1326**	**1.98**	12.31	Ld
ML90TG	8.85	3/8	HMBP	F	200-220/230V 50/60Hz ~1	CSIR	R	C-V	280	461	**1049**	**1.61**	1243	**1326**	**1.98**	11.29	Ld
MLY90RAa	9.09	3/8	HMBP	F	220-240V 50Hz ~1	CSIR	R	C-V	316	509	**1125**	**1.73**	1327	**1419**	**2.13**	11.34	Ld
MLY90RAb	9.09	3/8	HMBP	F	220-240V 50Hz ~1	CSR	R	C-V	316	508	**1129**	**1.89**	1333	**1425**	**2.34**	11.44	Ld
MLT12RA	10.70	3/8	HMBP	F	220-240V 50Hz ~1	CSR	R	C-V	396	632	**1379**	**1.88**	1622	**1738**	**2.31**	11.59	Ld
MLT12RG	10.70	3/8	HMBP	F	200-220/220-230V 50/60Hz ~1	CSR	R	C-V	365	601	**1337**	**1.83**	1576	**1686**	**2.26**	12.24	Ld
MPT12RG	12.10	3/8	HBP	F	200-220/220-230V 50/60Hz ~1	CSR	R	C-V	482	689	**1489**	**1.87**	1769	**1884**	**2.33**	12.89	Pd
MPT12RA	12.10	3/8	HMBP	F	220-240V 50Hz ~1	CSR	R	C-V	437	723	**1559**	**1.91**	1823	**1960**	**2.35**	12.20	Pd
MPT14RA	14.32	1/2	HBP	F	220-240V 50Hz ~1	CSR	R	C-V	-	789	**1750**	**1.78**	2068	**2210**	**2.20**	12.25	Pd
MX16TBa	16.03	7/8	HMBP	F	220-240V 50Hz ~1	CSR	R	C-V	481	814	**1868**	**1.74**	2212	**2361**	**2.15**	16.33	Xd
MX18TBa	18.40	7/8	HMBP	F	220-240V 50Hz ~1	CSR	R	C-V	551	932	**2143**	**1.76**	2540	**2710**	**2.18**	16.33	Xd
MX18TGa	18.40	7/8	HMBP	F	200-220/220-230V 50/60Hz ~1	CSR	R	C-V	551	932	**2143**	**1.76**	2540	**2710**	**2.18**	16.24	Xd
MX21TBa	20.72	1	HMBP	F	220-240V 50Hz ~1	CSR	R	C-V	621	1047	**2409**	**1.74**	2857	**3047**	**2.15**	16.52	Xd
MX21TGa	20.72	1	HMBP	F	200-220/220-230V 50/60Hz ~1	CSR	R	C-V	621	1047	**2409**	**1.74**	2857	**3047**	**2.15**	16.74	Sb
MS18T3	18.10	7/8	HMBP	F	400/440V 50/60Hz ~3	3PHASE	P	C-V	421	834	**2124**	**1.89**	2543	**2698**	**2.35**	20.00	Xd
MS22T3	21.75	1	HMBP	F	400/440V 50/60Hz ~3	3PHASE	P	C-V	451	970	**2560**	**1.98**	3072	**3256**	**2.45**	20.00	Sb
MS22TB	21.75	1	HMBP	F	220-240V 50Hz ~1	CSR	R	C-V	451	967	**2550**	**2.02**	3060	**3244**	**2.50**	20.51	Sc
MS26T3	25.93	1 3/8	HMBP	F	400/440V 50/60Hz ~3	3PHASE	P	C-V	671	1289	**3166**	**1.98**	3769	**4012**	**2.45**	18.60	Sd
MS26TB	25.93	1 3/8	HMBP	F	220-240V 50Hz ~1	CSR	R	C-V	671	1288	**3164**	**2.00**	3767	**4010**	**2.46**	22.12	Sd
MS26TG	25.93	1 3/8	HMBP	F	200-220/230V 50/60Hz ~1	CSR	R	C-V	671	1289	**3166**	**2.00**	3769	**4012**	**2.46**	23.00	Sd
MS34TB	34.42	1 5/8	HBP	F	220-240V 50Hz ~1	CSR	R	C-V	-	1850	**4205**	**1.89**	4930	**5292**	**2.30**	22.21	Sd
MS34TG	34.42	1 5/8	HBP	F	200-220/230V 50/60Hz ~1	CSR	R	C-V	-	1850	**4205**	**1.89**	4930	**5292**	**2.30**	22.78	Sd
MS34T3	34.42	1 5/8	HMBP	F	400/440V 50/60Hz ~3	3PHASE	P	C-V	1002	1850	**4205**	**1.79**	4930	**5292**	**2.20**	22.80	Sd
MS38TB (**)	38.00	2	HBP	F	220-240V 50Hz ~1	CSR	R	C-V	-	1998	**4542**	**1.89**	5325	**5716**	**2.29**	22.90	Sd

Green Cooling Models

New Models

(*) Or R407B / R452A

(**) Under development

R404A • R507 (*) HMBP | HBP • 60 Hz

MODEL	DISPLACEMENT	POWER	APPLICATION	CPR COOLING	VOLTAGE FREQUENCY	MOTOR	STARTING	EXPANSION	REFRIGERATION CAPACITY COP in W/W 1 W = 0,864 kcal/h = 3,415 BTU/h Evaporating Temperature ºC							WEIGHT	DESIGN
									Cecomaf (W)					Ashrae			
									-25	-15	5		10	7.2			
											W	COP		W	COP		
	cm³	hp														Kg	
ML40TG	4.05	1/6	HMBP	F	200-240/220-230V 50/60Hz ~1	CSIR	R	C-V	155	248	**553**	**1.39**	653	**698**	**1.70**	9.12	Lc
ML45TG	4.56	1/6	HMBP	F	200-240/220-230V 50/60Hz ~1	CSIR	R	C-V	190	310	**672**	**1.55**	788	**846**	**1.89**	9.14	Lc
MLT45RG	4.56	1/5	HMBP	F	200-220/230V 50/60Hz ~1	CSR	R	C-V	192	314	**687**	**1.83**	808	**865**	**2.25**	9.75	Ld
ML60TG	5.68	1/4	HMBP	F	200-220/230V 50/60Hz ~1	CSIR	R	C-V	193	323	**753**	**1.49**	896	**954**	**1.83**	10.57	Lc
ML60TR	5.68	1/4	HMBP	F	115-127V 60Hz ~1	CSIR	R	C-V	193	323	**753**	**1.48**	896	**954**	**1.83**	10.58	Lc
MLY60RDa	5.98	1/4	HMBP	F	115V 60Hz ~1	CSIR	R	C-V	250	408	**900**	**1.70**	1059	**1134**	**2.10**	10.55	Lc
MLY60RDb	5.98	1/4	HMBP	F	115V 60Hz ~1	CSR	R	C-V	250	408	**900**	**1.83**	1059	**1134**	**2.27**	10.65	Lc
MLY60RGa	5.98	1/4	HMBP	F	200-220/220-230V 50/60Hz ~1	CSIR	R	C-V	257	407	**883**	**1.74**	1039	**1113**	**2.14**	10.24	Lc
MLY60RGb	5.98	1/4	HMBP	F	200-220/220-230V 50/60Hz ~1	CSR	R	C-V	258	416	**897**	**1.89**	1051	**1128**	**2.33**	10.34	Lc
ML80TG	7.57	3/8	HMBP	F	200-240/220-230V 50/60Hz ~1	CSIR	R	C-V	263	448	**1022**	**1.59**	1208	**1291**	**1.96**	11.81	Ld
MLY80RDa	8.10	3/8	HMBP	F	115V 60Hz ~1	CSIR	R	C-V	329	541	**1224**	**1.75**	1449	**1547**	**2.15**	11.21	Ld
MLY80RDb	8.10	3/8	HMBP	F	115V 60Hz ~1	CSR	R	C-V	329	541	**1224**	**1.81**	1449	**1547**	**2.22**	11.31	Ld
ML90TG	8.85	3/8	HMBP	F	200-220/230V 50/60Hz ~1	CSIR	R	C-V	329	539	**1227**	**1.54**	1454	**1551**	**1.89**	11.29	Ld
MLT12RG	10.70	3/8	HMBP	F	200-220/220-230V 50/60Hz ~1	CSR	R	C-V	441	702	**1553**	**1.75**	1833	**1960**	**2.16**	12.24	Ld
MLT12RR	10.70	1/2	HMBP	F	115-127V 60Hz ~1	CSR	R	C-V	463	736	**1560**	**1.75**	1825	**1961**	**2.15**	11.96	Ld
MPT12RG	12.10	3/8	HBP	F	200-220/220-230V 50/60Hz ~1	CSR	R	C-V	-	795	**1725**	**1.79**	2043	**2179**	**2.22**	12.89	Pd
MPT14RF	14.32	1/2	HBP	F	208-230V 60Hz ~1	CSR	R	C-V	-	929	**1990**	**1.56**	2351	**2512**	**1.91**	12.67	Pd
MPT14RD (*)	14.32	1/2	HBP	F	115V 60Hz ~1	CSR	R	C-V	-	929	**1990**	**1.56**	2351	**2512**	**1.91**	12.67	Pd
MX16TE	16.03	7/8	HMBP	F	115V 60Hz ~1	CSR	R	C-V	561	949	**2185**	**1.62**	2589	**2762**	**2.00**	17.20	Xd
MX18TE	18.40	7/8	HMBP	F	115V 60Hz ~1	CSR	R	C-V	644	1090	**2507**	**1.62**	2972	**3170**	**2.00**	17.20	Xd
MX18TGa	18.40	7/8	HMBP	F	200-220/220-230V 50/60Hz ~1	CSR	R	C-V	644	1090	**2507**	**1.74**	2972	**3170**	**2.15**	16.24	Xd
MX21TGa	20.72	1	HMBP	F	200-220/220-230V 50/60Hz ~1	CSR	R	C-V	726	1211	**2781**	**1.72**	3299	**3518**	**2.12**	16.74	Sb
MS18T3	18.10	7/8	HMBP	F	400/440V 50/60Hz ~3	3PHASE	P	C-V	491	971	**2471**	**1.82**	2959	**3140**	**2.25**	20.00	Sb
MS22T3	21.75	1	HMBP	F	400/440V 50/60Hz ~3	3PHASE	P	C-V	527	1135	**2995**	**1.94**	3595	**3810**	**2.40**	20.00	Sb
MS26T3	25.93	1,375	HMBP	F	400/440V 50/60Hz ~3	3PHASE	P	C-V	785	1508	**3705**	**1.84**	4411	**4695**	**2.25**	18.60	Sd
MS26TG	25.93	1,375	HMBP	F	200-220/230V 50/60Hz ~1	CSR	R	C-V	785	1508	**3705**	**1.93**	4411	**4695**	**2.37**	23.00	Sd
MS34TG	34.42	1,625	HBP	F	200-220/230V 50/60Hz ~1	CSR	R	C-V	-	2163	**4917**	**1.71**	5762	**6187**	**2.10**	22.78	Sd
MS34T3	34.42	1,625	HMBP	F	400/440V 50/60Hz ~3	3PHASE	P	C-V	1172	2164	**4916**	**1.71**	5764	**6187**	**2.10**	22.80	Sd

Green Cooling Models
New Models

(*) Or R407B / R452A
(**) Under development

	Conditions			
	CECOMAF		ASHRAE	
	LBP (A)	HMBP/HBP (C)	LBP (B)	HMBP/HBP (D)
Evaporating temperature ºC	-25	5	-23.3	7.2
Condensing temperature ºC	55	55	55	55
Liquid temperature ºC	55	55	32	46
Suction temperature ºC	32	32	32	35
Ambient temperature ºC	32	32	32	35

All R404A Cubigel Compressor® range can be used with R452A. For detailed information, refer to the statement at **www.huayicompressor.es**

Measurement conversion
R404A
W (A) x 1.50 = W (B)
W (C) x 1.26 = W (D)

S compressor's range can be provided with tube or valve

3.

Compressors Catalogue

DC/VSC

R134a (*) HMBP • 50 | 60 Hz — Variable Speed Compressors

MODEL	DISPLACEMENT cm³	APPLICATION	COOLING	VOLTAGE FREQUENCY	MOTOR	EXPANSION	SPEED rpm	REFRIGERATION CAPACITY COP in W/W 1 W = 0,864 kcal/h = 3,415 BTU/h Evaporating Temperature °C Cecomaf (W) -25	-15	+5 W	+5 COP	+10	Ashrae +7.2 W	+7.2 (W/W)	WEIGHT Kg	DESIGN
GLT99FSN	9.95	HMBP	F	220-240V 50/60Hz ~1	ECM	C-V	1800	115	205	**542**	**2.52**	658	**651**	**2.92**	11.20	Lc
							2100	135	242	**630**	**2.60**	764	**787**	**2.98**		
							2400	153	275	**712**	**2.54**	860	**854**	**2.92**		
							3000	188	340	**868**	**2.42**	1046	**1040**	**2.77**		
							3600	222	391	**1030**	**2.30**	1253	**1238**	**2.62**		

R290 HMBP • 50 | 60 Hz — Variable Speed Compressors

MODEL	DISPLACEMENT cm³	APPLICATION	COOLING	VOLTAGE FREQUENCY	MOTOR	EXPANSION	SPEED rpm	REFRIGERATION CAPACITY COP in W/W 1 W = 0,864 kcal/h = 3,415 BTU/h Evaporating Temperature °C Cecomaf (W) -25	-15	+5 W	+5 COP	+10	Ashrae +7.2 W	+7.2 (W/W)	WEIGHT Kg	DESIGN
NLT60FSN (**)	5.98	HMBP	F	220-240V 50/60Hz ~1	ECM	C	1800	101	180	**476**	**2.76**	578	**541**	**3.08**	10.80	Lc
							2100	119	214	**557**	**2.79**	675	**632**	**3.12**		
							2400	136	244	**632**	**2.75**	764	**718**	**3.07**		
							3000	171	308	**787**	**2.63**	948	**893**	**2.94**		
							3600	203	358	**940**	**2.55**	1144	**1067**	**2.85**		

R290 LBP • 50 | 60 Hz — Variable Speed Compressors

MODEL	DISPLACEMENT cm³	APPLICATION	COOLING	VOLTAGE FREQUENCY	MOTOR	EXPANSION	SPEED rpm	REFRIGERATION CAPACITY COP in W/W 1 W = 0,864 kcal/h = 3,415 BTU/h Evaporating Temperature °C Cecomaf (W) -40	-30	-25 W	-25 COP	-10	Ashrae -23.3 W	-23.3 (W/W)	WEIGHT Kg	DESIGN
NVT70FSC (**)	7.00	LMBP	F	220-240V 50/60Hz ~1	ECM	C	1800	65	110	**145**	**1.28**	293	**196**	**1.65**	6.20	Vb
							2100	73	127	**166**	**1.31**	328	**223**	**1.70**		
							2400	89	157	**204**	**1.32**	398	**275**	**1.72**		
							3000	107	196	**252**	**1.31**	492	**339**	**1.70**		
							3600	127	232	**298**	**1.29**	581	**400**	**1.66**		
NLT12FSC (**)	12.10	LMBP	F	220-240V 50/60Hz ~1	ECM	C	1800	104	178	**233**	**1.23**	472	**316**	**1.58**	8.95	Ld
							2100	118	205	**268**	**1.26**	528	**358**	**1.63**		
							2400	134	236	**307**	**1.24**	598	**413**	**1.61**		
							3000	161	294	**378**	**1.23**	737	**508**	**1.59**		
							3600	191	348	**448**	**1.20**	873	**601**	**1.55**		
NPT12FSC	12.10	LBP	F	220-240V 50/60Hz ~1	ECM	C	1800	115	196	**257**	**1.18**	521	**348**	**1.52**	12.10	Pc
							2100	134	233	**305**	**1.28**	601	**408**	**1.65**		
							2400	152	268	**349**	**1.26**	680	**470**	**1.63**		
							3000	178	326	**419**	**1.25**	-	**563**	**1.60**		
							3600	216	393	**506**	**1.22**	-	**679**	**1.57**		

Green Cooling Models

(*) Or HFO1234yf (**) Model under development. Provisional performances/data.

R134a (*) LBP | MBP | HBP • 12-42 DC

MODEL	DISPLACEMENT	APPLICATION	COOLING	VOLTAGE FREQUENCY	MOTOR	EXPANSION	SPEED	REFRIGERATION CAPACITY COP in W/W 1 W = 0,864 kcal/h = 3,415 BTU/h Evaporating Temperature ºC							WEIGHT	DESIGN
								Cecomaf (W)					Ashrae			
										+5			+7.2			
	cm³						rpm	-25	-15	W	COP	+10	W	(W/W)	Kg	
GLT80TDC 24-42V	8.10	HMBP	F	24-42V DC	ECM	C	1500	78	139	**362**	**1.93**	421	**429**	**2.19**	8.40	Lc (**)
							2000	107	190	**487**	**2.06**	565	**578**	**2.34**		
							2500	135	238	**601**	**1.99**	710	**712**	**2.26**		
							3000	161	281	**711**	**1.91**	840	**843**	**2.17**		
							3500	185	320	**818**	**1.82**	962	**969**	**2.07**		

Green Cooling Models **(*) Or HFO1234yf (**) Model under development. Provisional performances/data.**

	Conditions			
	CECOMAF		ASHRAE	
	LBP (A)	HMBP/HBP (C)	LBP (B)	HMBP/HBP (D)
Evaporating temperature ºC	-25	5	-23.3	7.2
Condensing temperature ºC	55	55	55	55
Liquid temperature ºC	55	55	32	46
Suction temperature ºC	32	32	32	35
Ambient temperature ºC	32	32	32	35

Measurement conversion

R134a
W (A) x 1.37 = W (B)
W (C) x 1.19 = W (D)

R290
W (A) x 1.36 = W (B)
W (C) x 1.20 = W (D)

4.

Technical Information

Technical Datasheets online

Complete data for each model of Cubigel Condensing Units
can be downloaded from the website:
https://catalog.huayicompressor.es

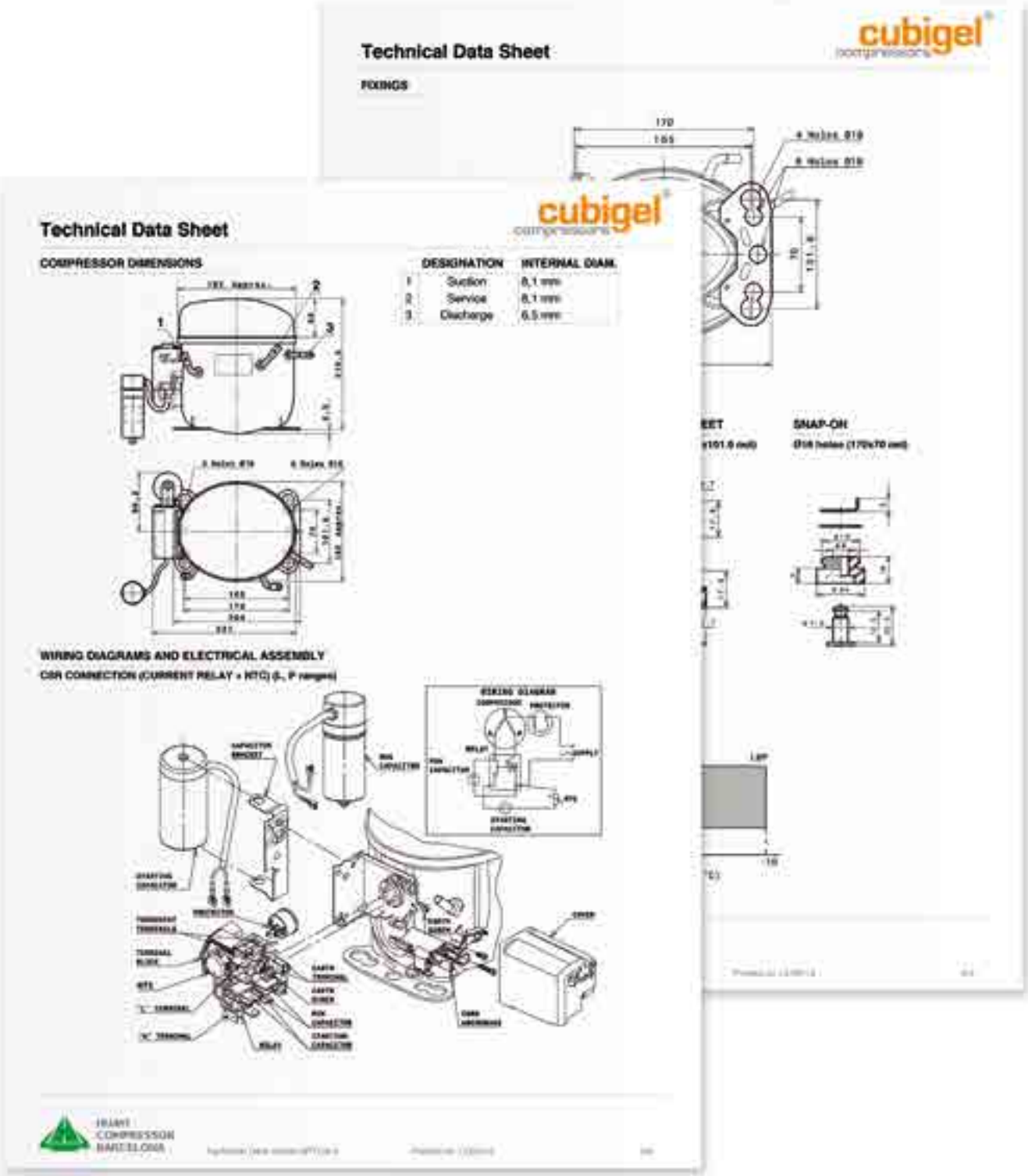
Technical Data Sheet
cubigel
FIXINGS
Technical Data Sheet
cubigel
COMPRESSOR DIMENSIONS
DESIGNATION
INTERNAL DIAM.
1 Suction 8,1 mm
2 Service 8,1 mm
3 Discharge 6,5 mm
SNAP-ON
WIRING DIAGRAMS AND ELECTRICAL ASSEMBLY
CSR CONNECTION (CURRENT RELAY + NTC) (L, P ranges)
WIRING DIAGRAM

Compressor Dimensional Drawings

Small L range

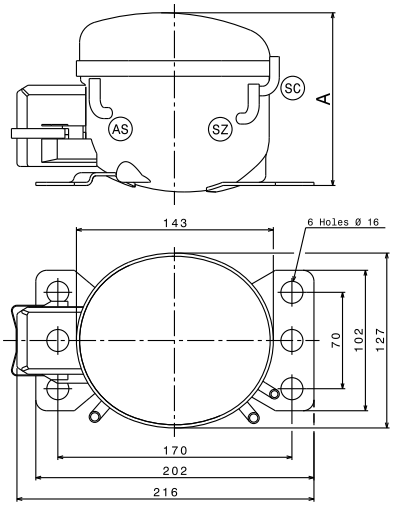

	Designation	Internal diam.
AS	Suction	6.2
SC	Discharge	4.9
SZ	Service	6.2

	A (mm)
SLb	125.5
SLc	129
SLd	138
SLe	141

B range

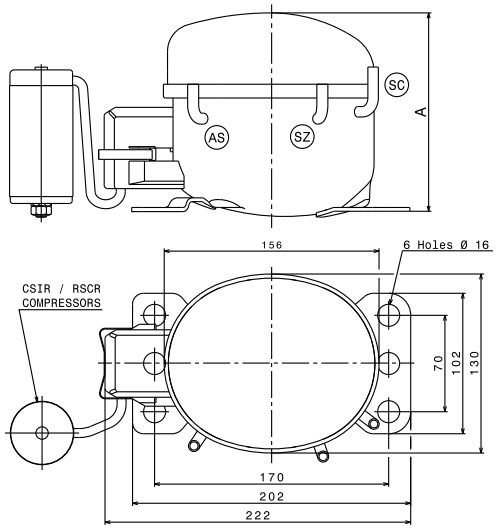

	Designation	Internal diam.
AS	Suction	6.2
SC	Discharge	4.9
SZ	Service	6.2

	A (mm)
Bb	141
Bc	145
Bd	153
Be	155
Bf	159

U range

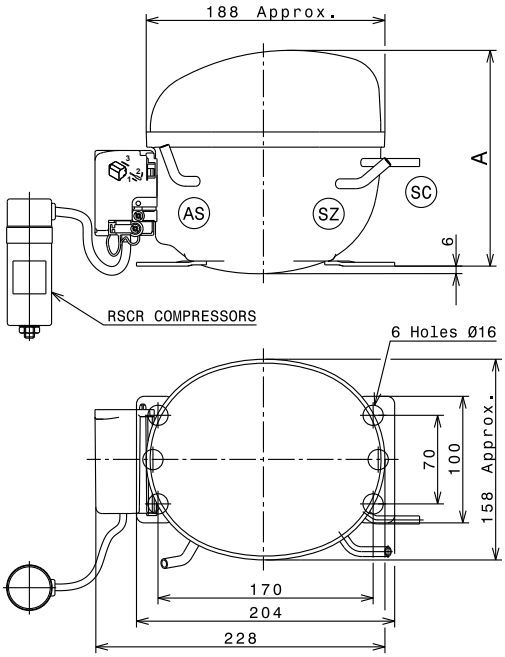

	A (mm)
Ub	173.5
Uc	176.5

LEGEND	
AS	Suction/Service
SC	Discharge
SZ	Service/Suction

L range

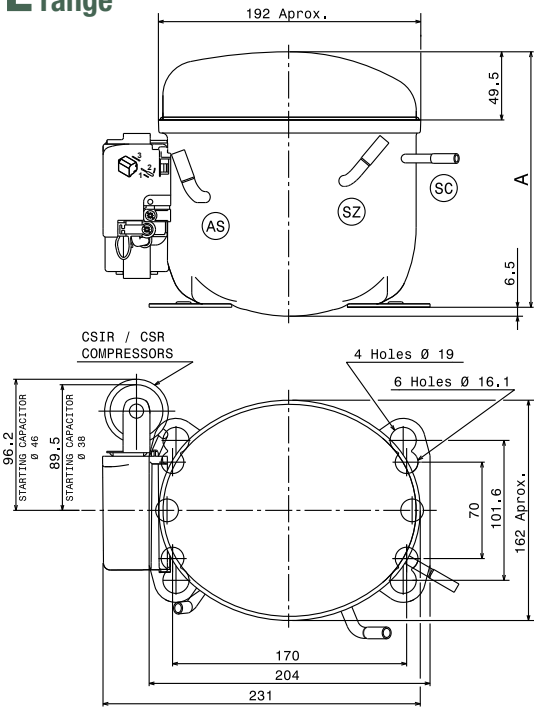

	A (mm)
Lb	175
Lc	185.6
Ld	198

LEGEND	
AS	Suction/Service
SC	Discharge
SZ	Service/Suction

P range

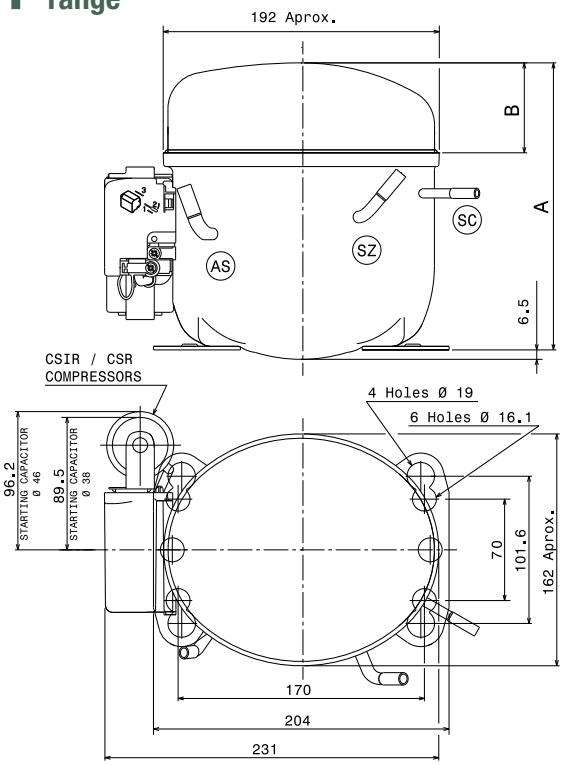

	A (mm)	B (mm)
Pc	198.1	62
Pd	210.5	62
Pe	215.5	67

LEGEND	
AS	Suction/Service
SC	Discharge
SZ	Service/Suction

X range

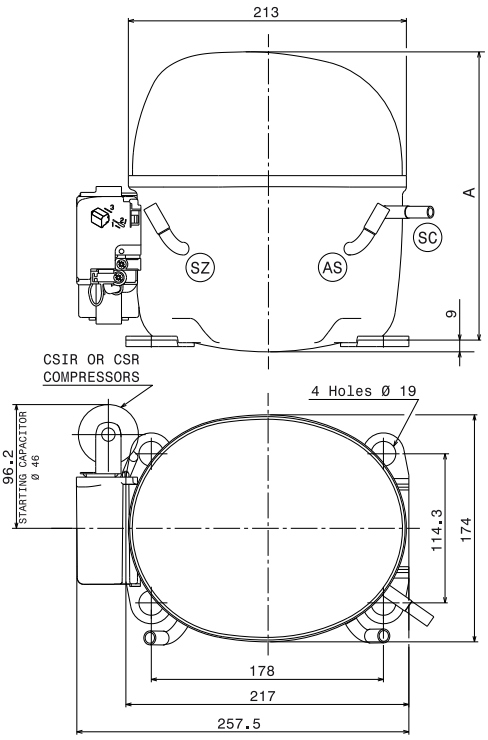

	A (mm)
Xc	215
Xd	221

LEGEND	
AS	Suction/Service
SC	Discharge
SZ	Service/Suction

S range (Tube)

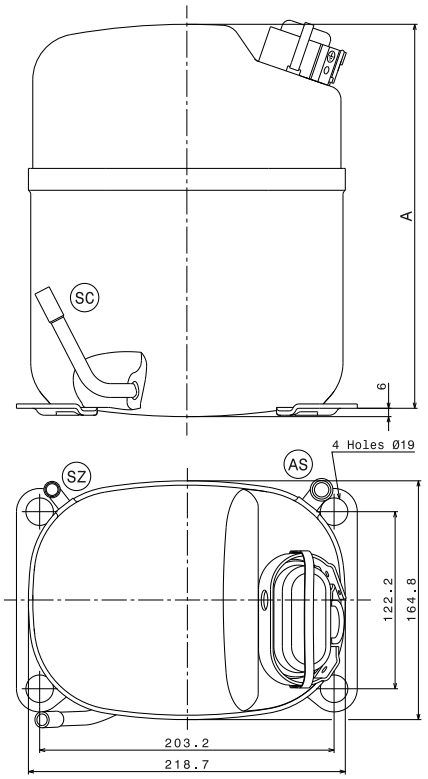

	A (mm)
Sb	252
Sc	265
Sd	276

LEGEND (TUBE)	
AS	Suction/Service
SC	Discharge
SZ	Service/Suction

S range (Valve)

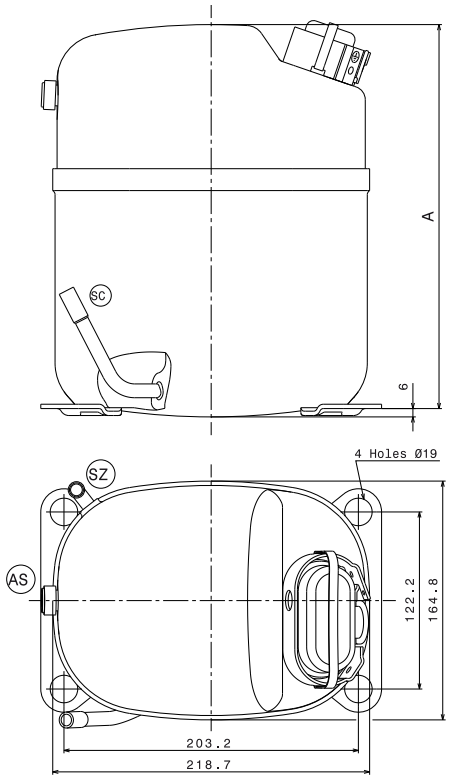

	A (mm)
Sb	252
Sc	265
Sd	276

LEGEND (VALVE)	
AS	Valve Service
SC	Discharge
SZ	Service/Suction

NVT70FSC

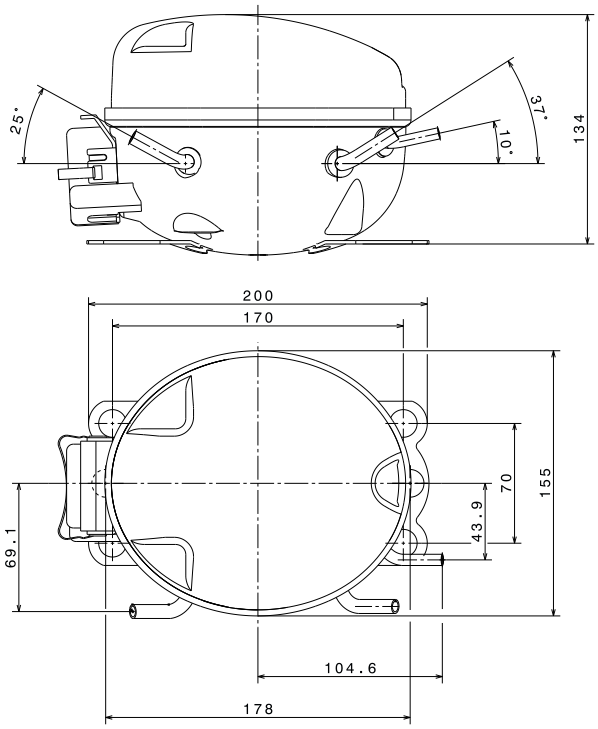

GLT99FSN and NLT60FSN

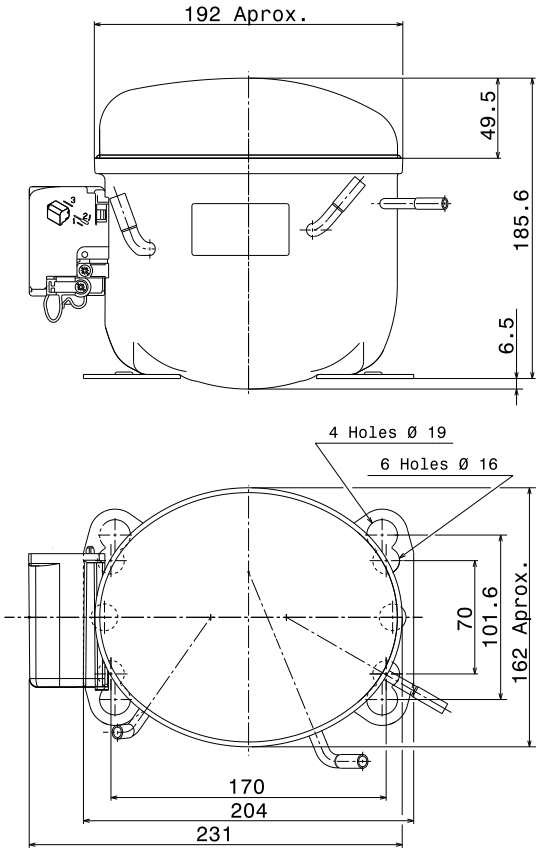

NPT12FSC

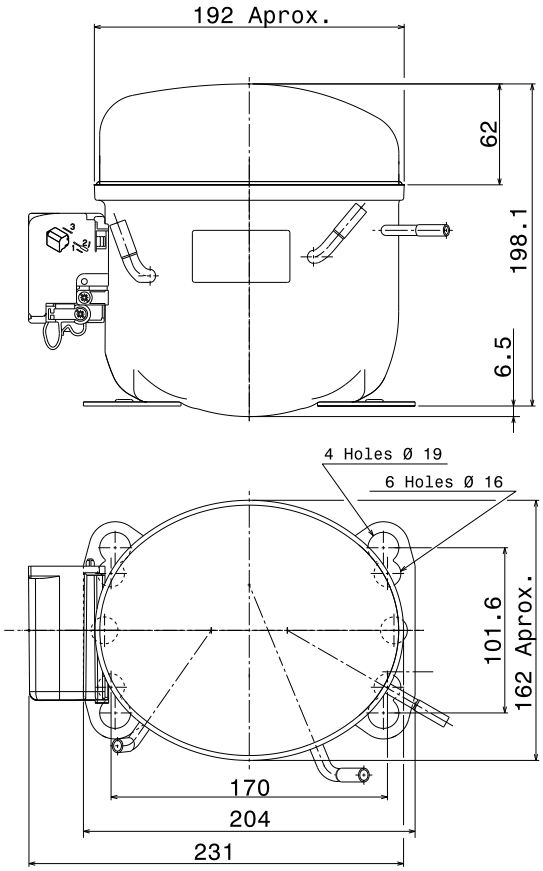

GLT80TDC

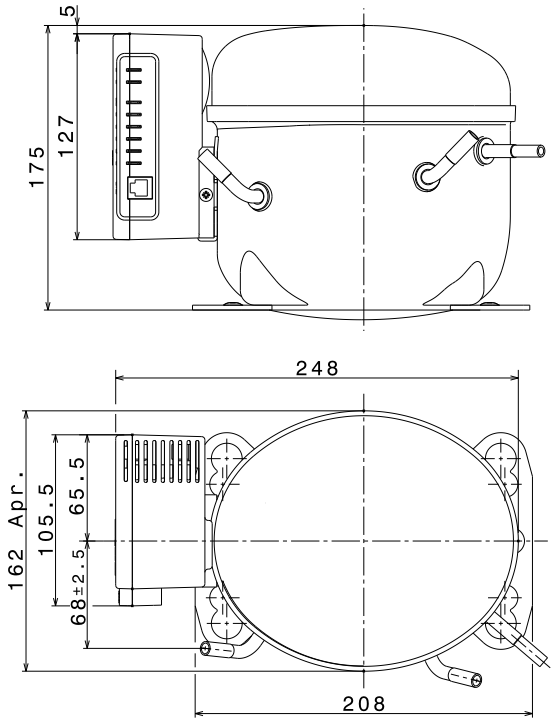

Electronic driver (FAC1) for GLT99FSN, NLT60FSN and NPT12FSN

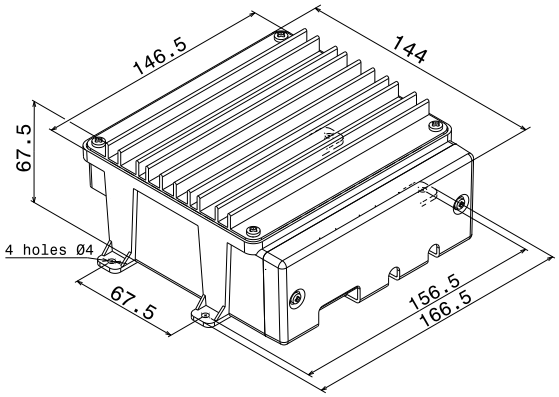

Electronic driver (FDC3) for GLT80TDC

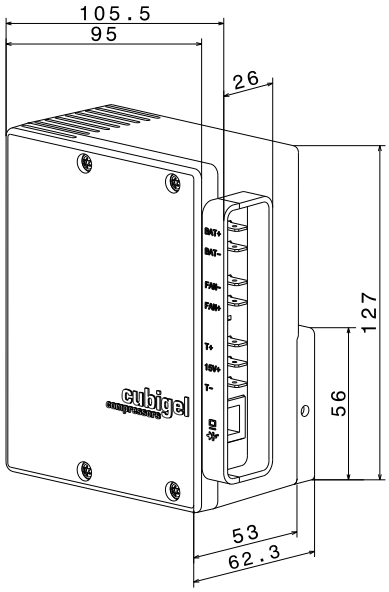

Fixings

Fixings allow the manufacturer of appliances to fix the compressor to the appliance base, connecting it to the cooling system.

Mounting feet

Range	Mounting feet	
Small L	Set of 4 holes of 16mm DIA with inter-axes: 70x170mm	
B, L, P, U	European type Set of 4 holes of 16 mm DIA with inter-axes: 70 x 170 mm	American type Two sets of 4 holes: 1.- Set of 16 mm DIA with inter-axes: 70 x 170 mm 2.- Set of ¾ inch (19 mm) DIA with inter-axes: 4 x 61/2 inch (101.6 x 165 mm)
X	One set of 4 holes of 19 mm (¾ inch) DIA with inter-axes: 114.3 x178 mm (41/2 x 7 inch)	
S	One set of 4 holes of 19 mm (¾ inch) DIA with inter-axes: 122.2 x 203.2 mm (413/16 x 7 7/8 inch)	

Silent Blocks (Mounting accessories)

STANDARD
Small L & B
D.16 holds net

STANDARD
D.16 holds net

AMERICAN FEET
D.19 holds net

STANDARD X & S
D.19 holds net

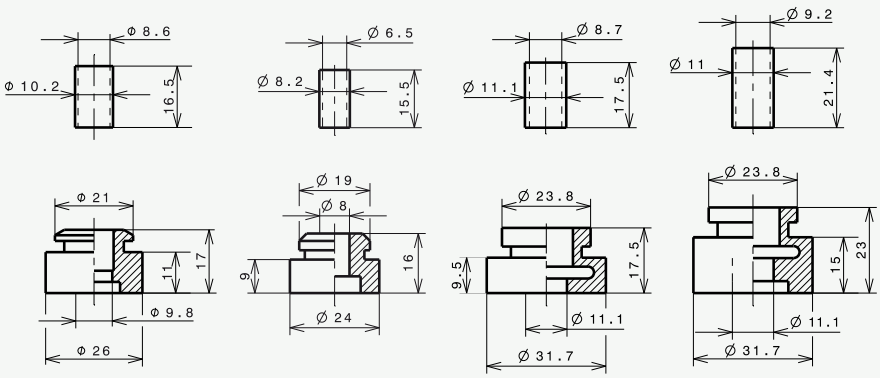

1. Mounting sleeve 2. Silent block

SNAP-ON
D. 16 holds net

AMERICAN SNAP-ON
D.19 holds net

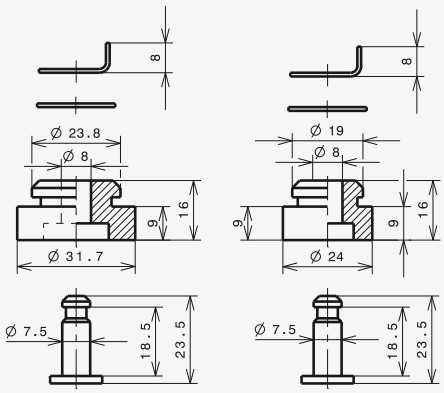

1. Clip 2. Washer 3. Silent block 4. Axis

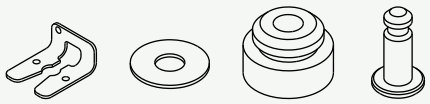

B Range (American mounting feet)

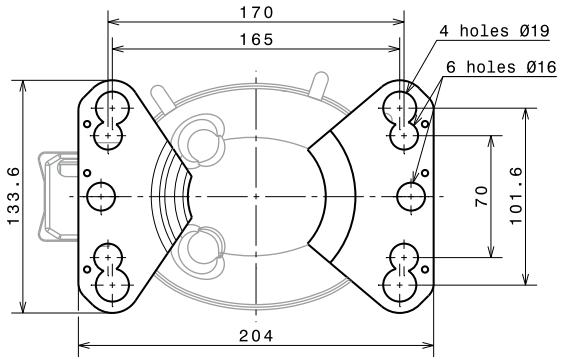

Small L & B Range (European mounting feet)

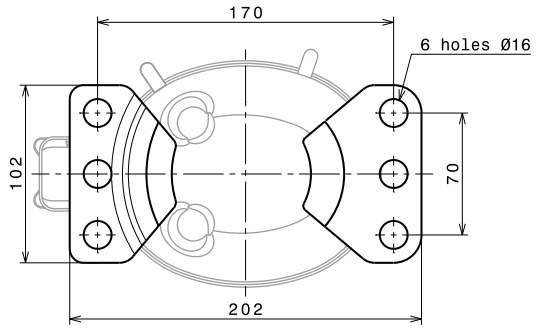

L / P Range (American mounting feet)

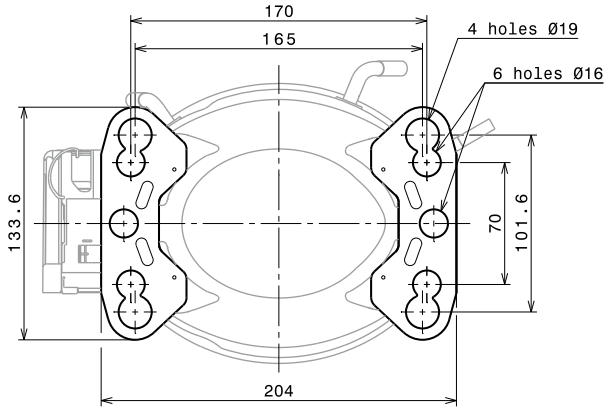

L / P Range (European mounting feet)

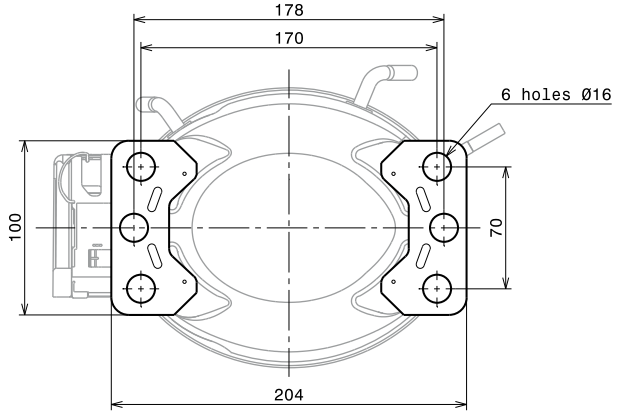

U Range (American mounting feet)

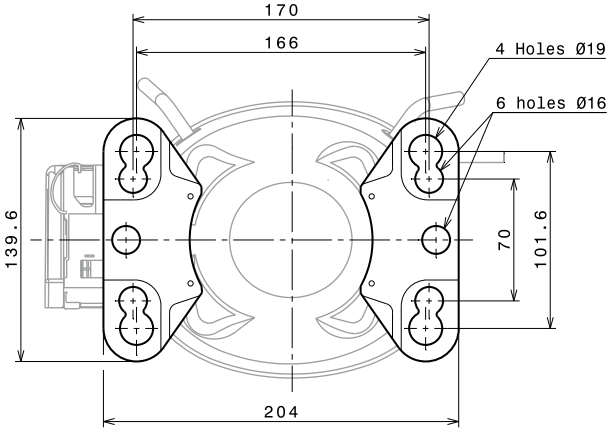

U Range (European mounting feet)

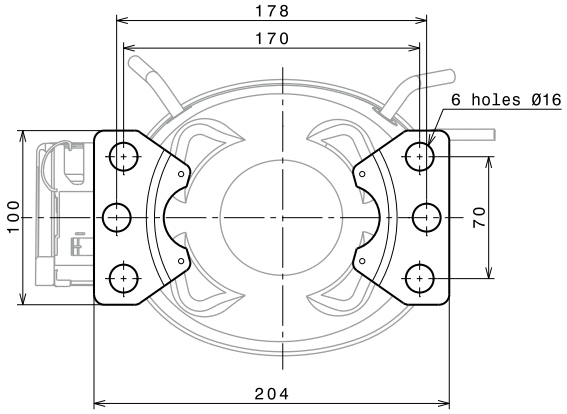

X Range

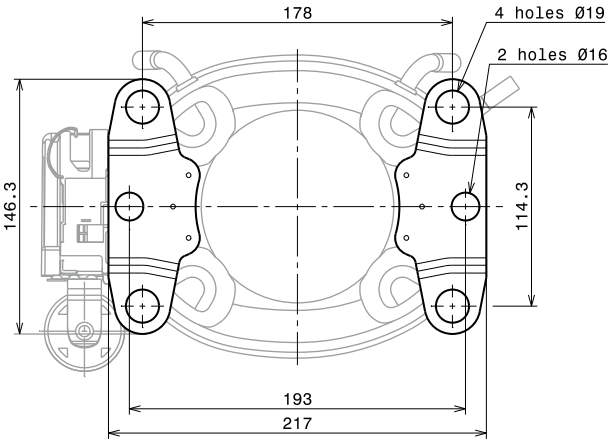

S Range

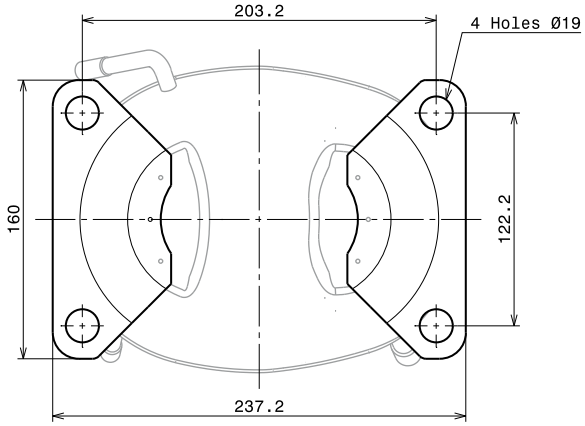

Wiring Diagrams and Electrical Assembly

RSIR CONNECTION (PTC) Small L & B

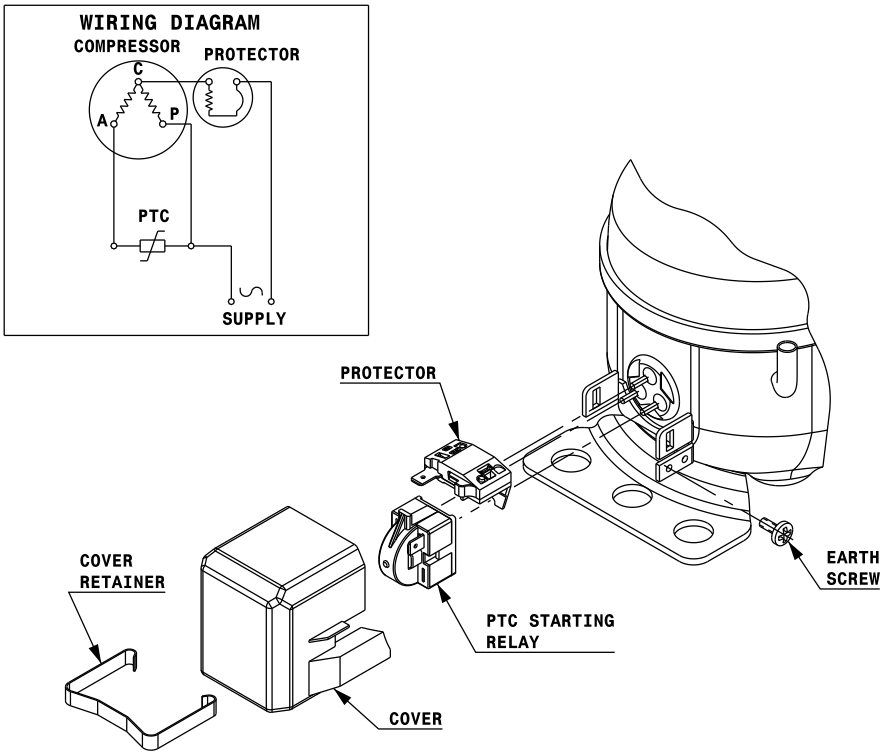

RSIR CONNECTION (PTC)

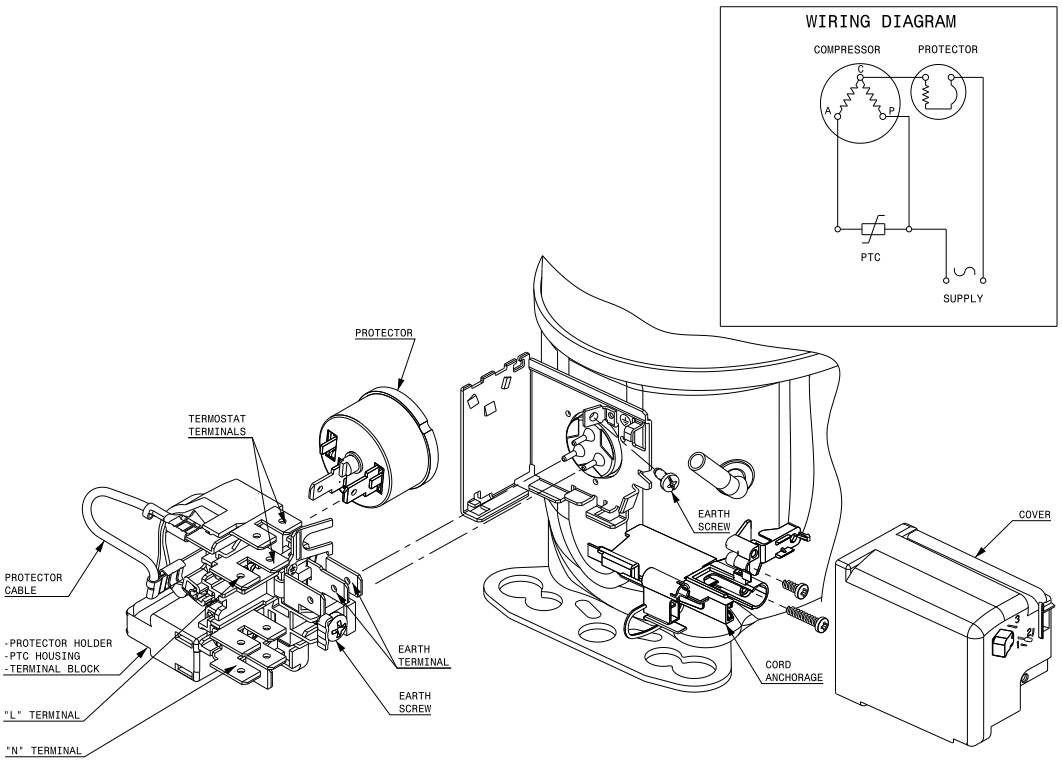

RSIR CONNECTION (RELAY)

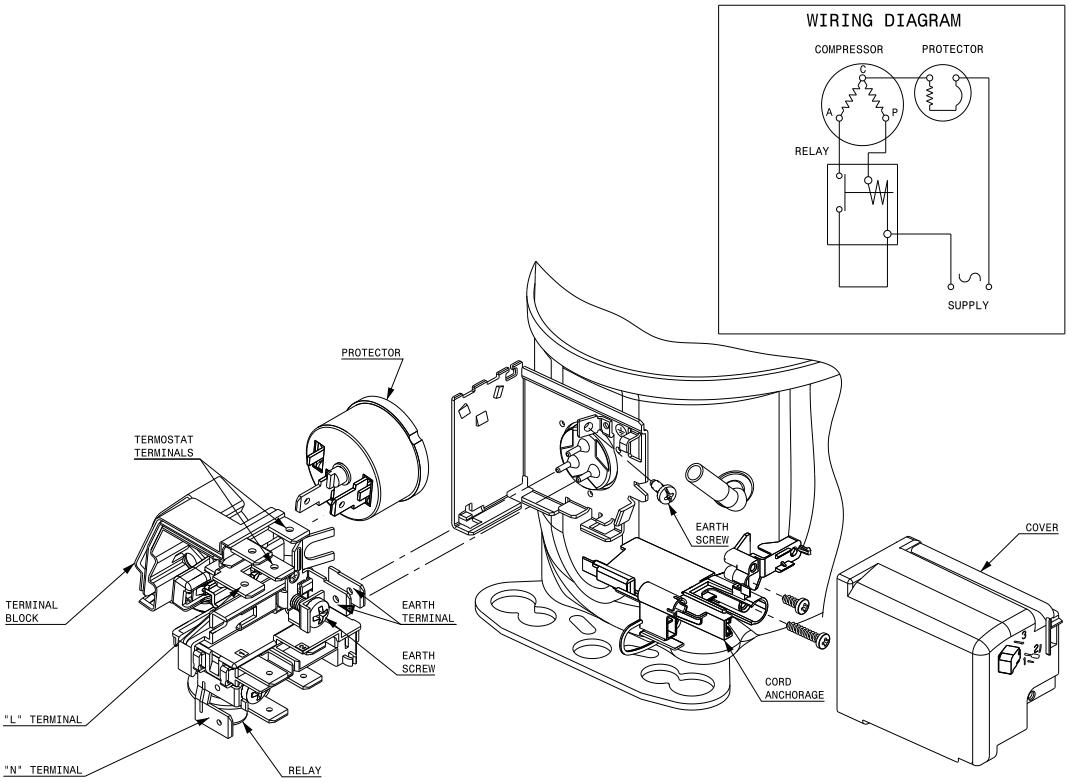

RSCR CONNECTION (PTC) Small L & B

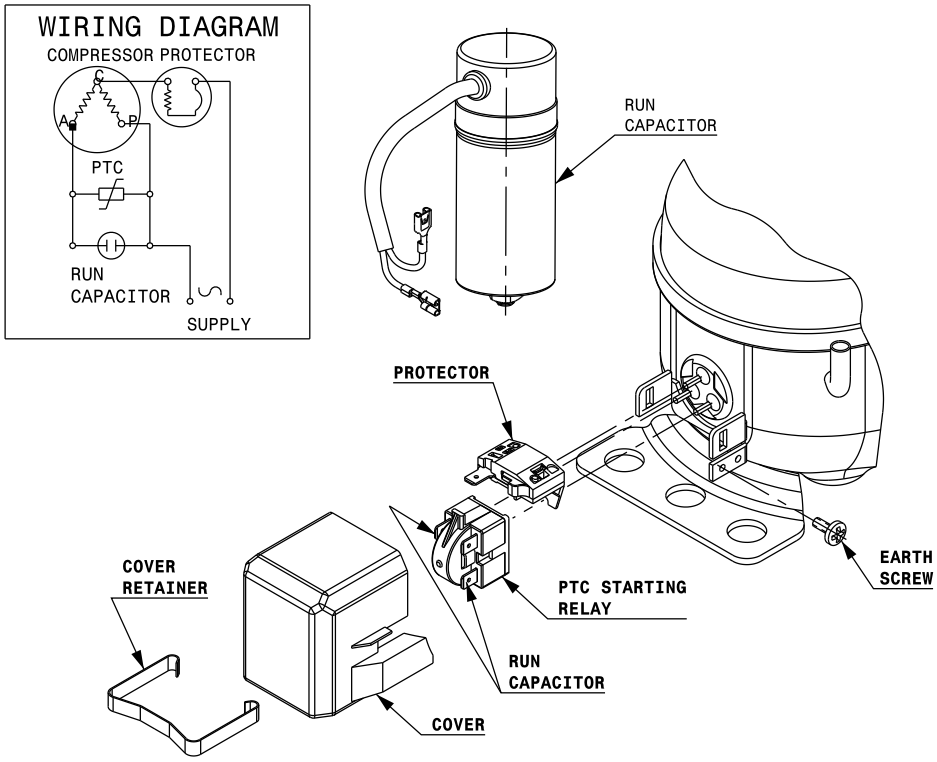

RSCR CONNECTION

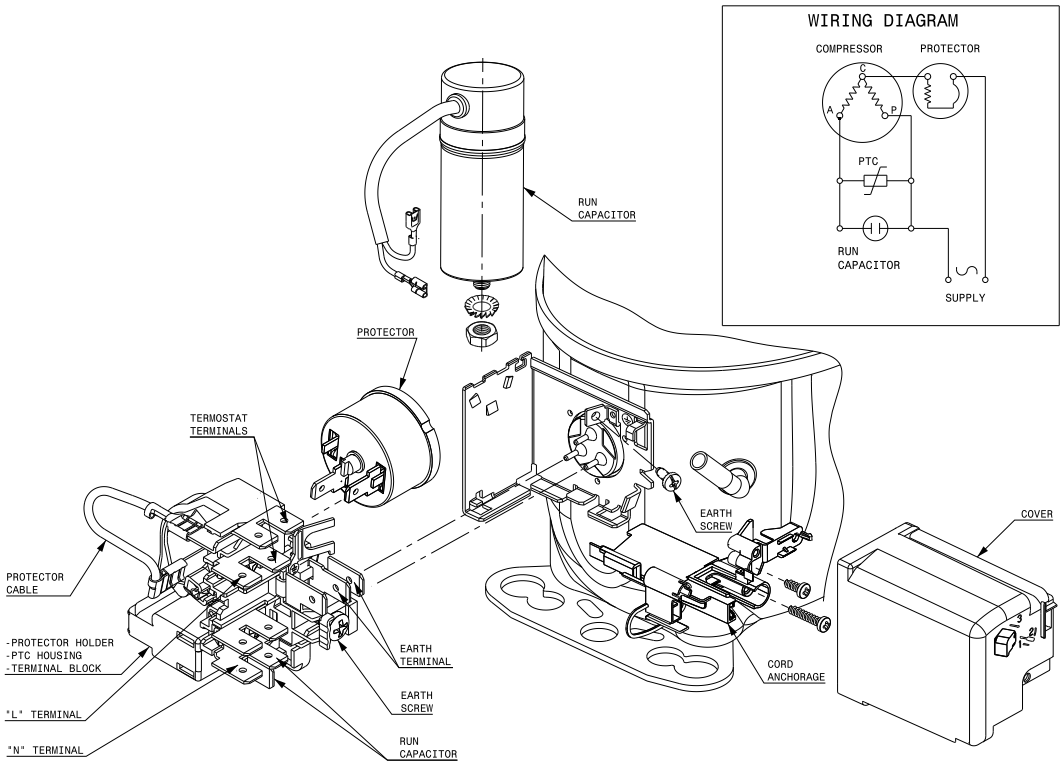

CSIR CONNECTION Small L & B

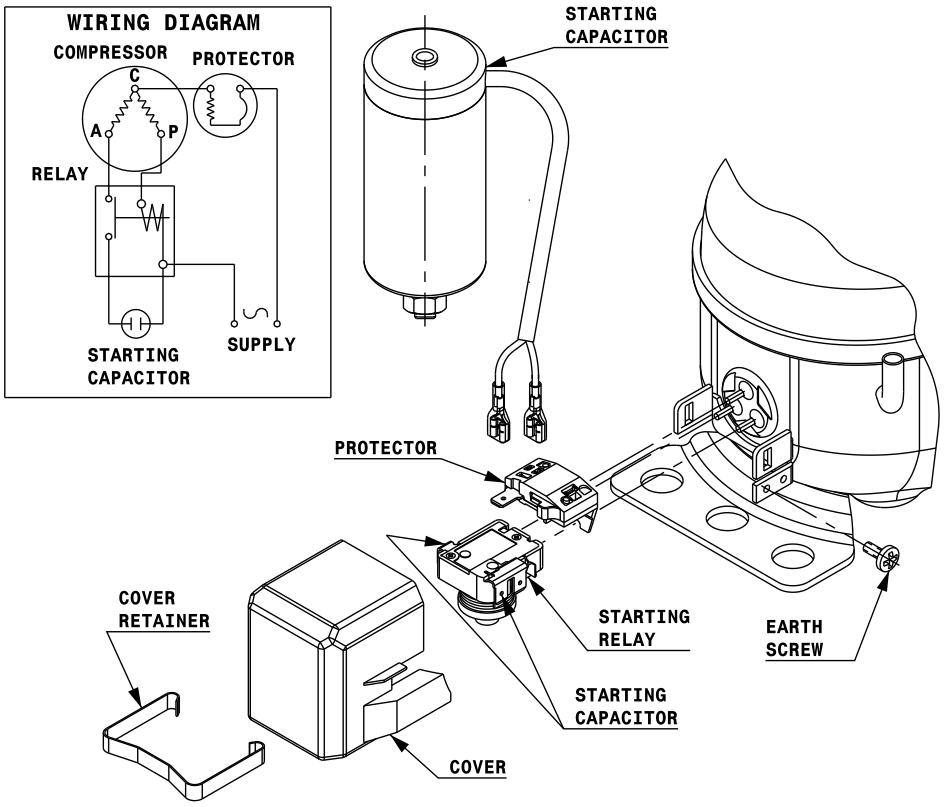

CSIR CONNECTION

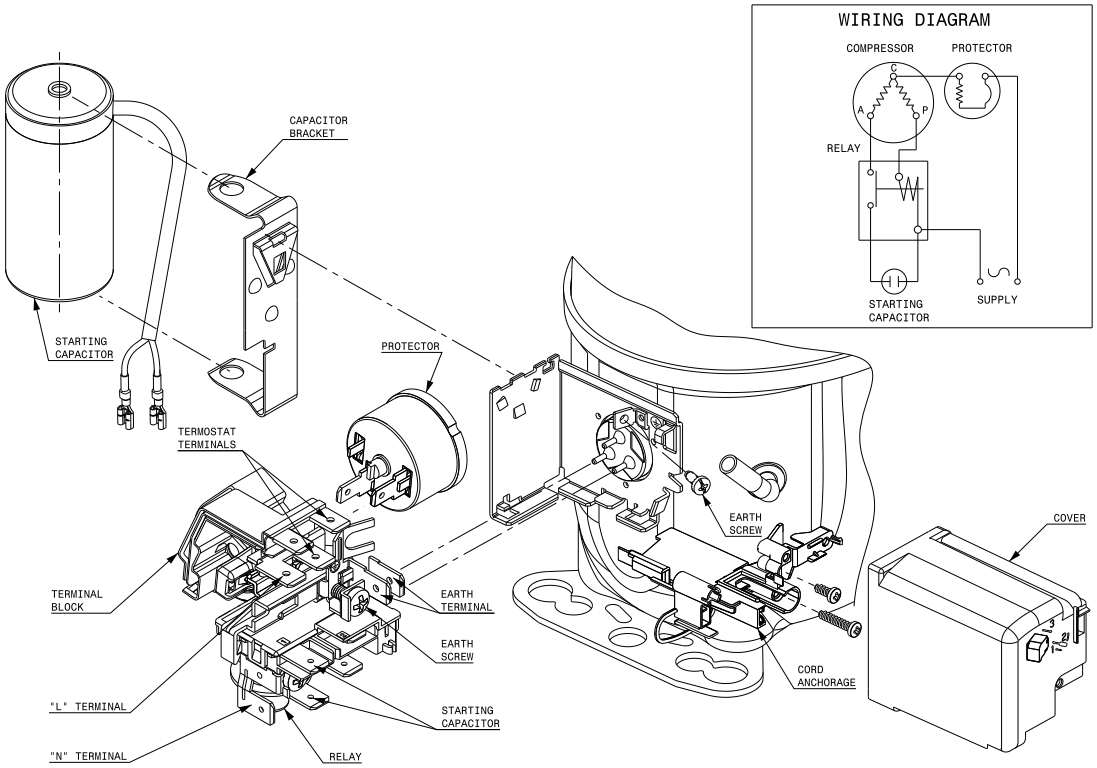

CSIR CONNECTION (EXTERNAL CONNECTING BOX) (S range)

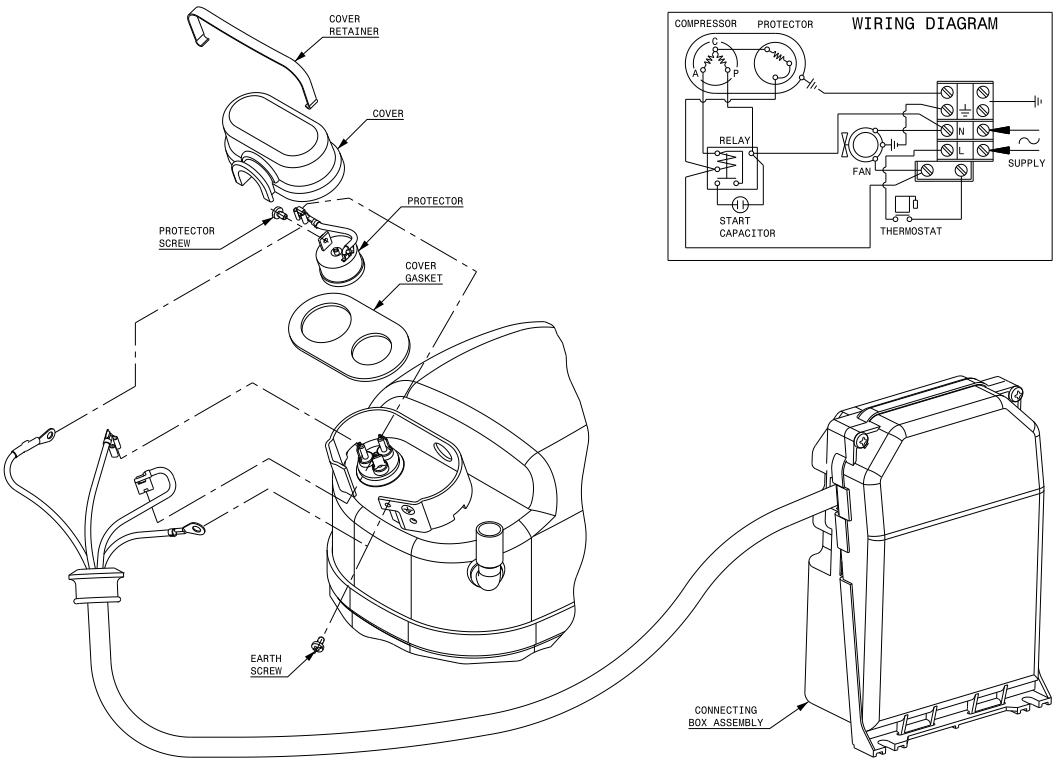

CSR CONNECTION (CURRENT RELAY + NTC)

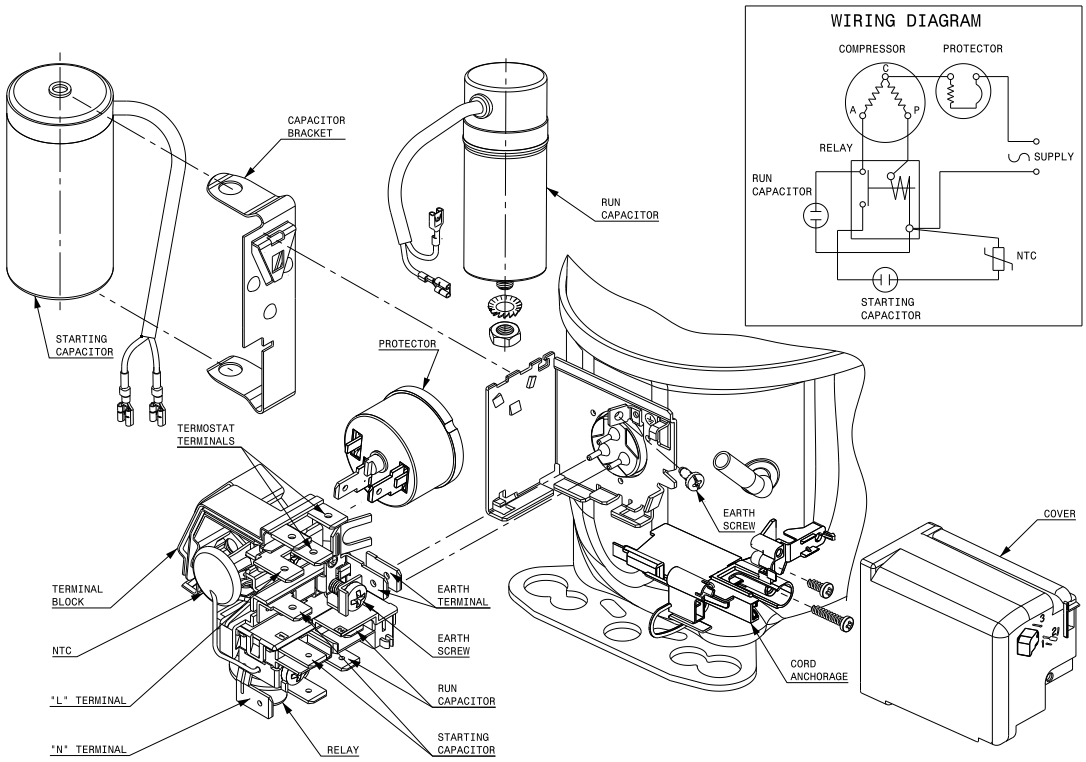

CSR CONNECTION (EXTERNAL CONNECTING BOX) (P, X ranges)

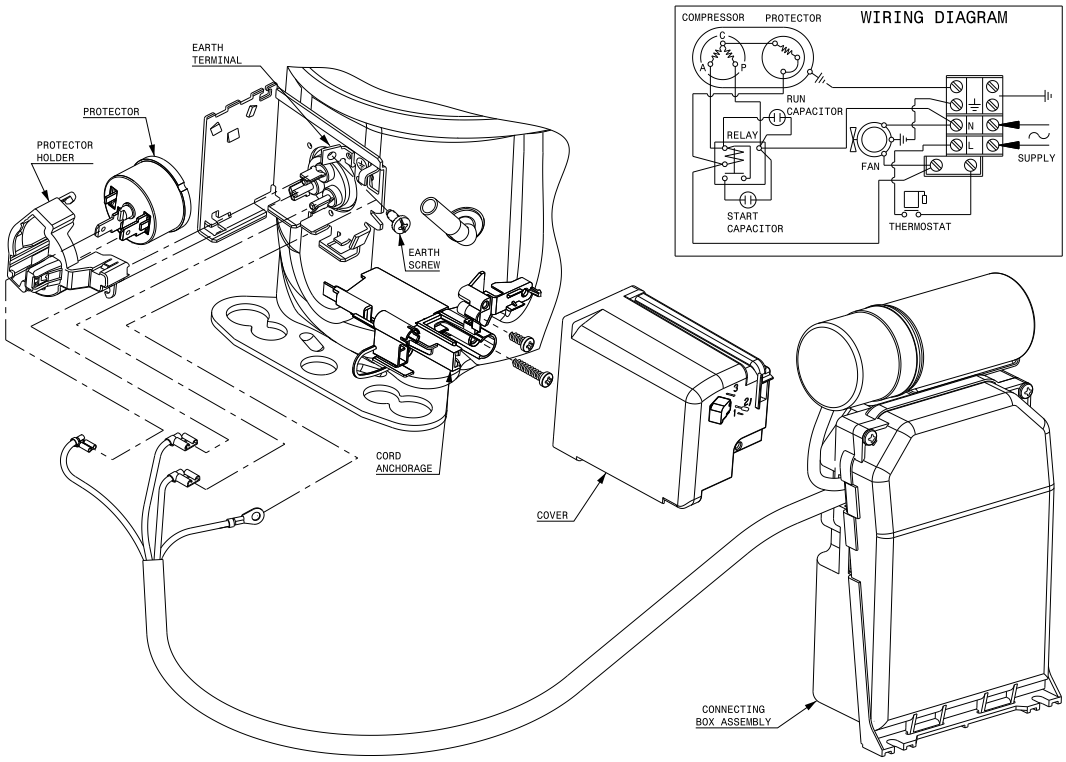

CSR CONNECTION (EXTERNAL CONNECTING BOX) (S range)

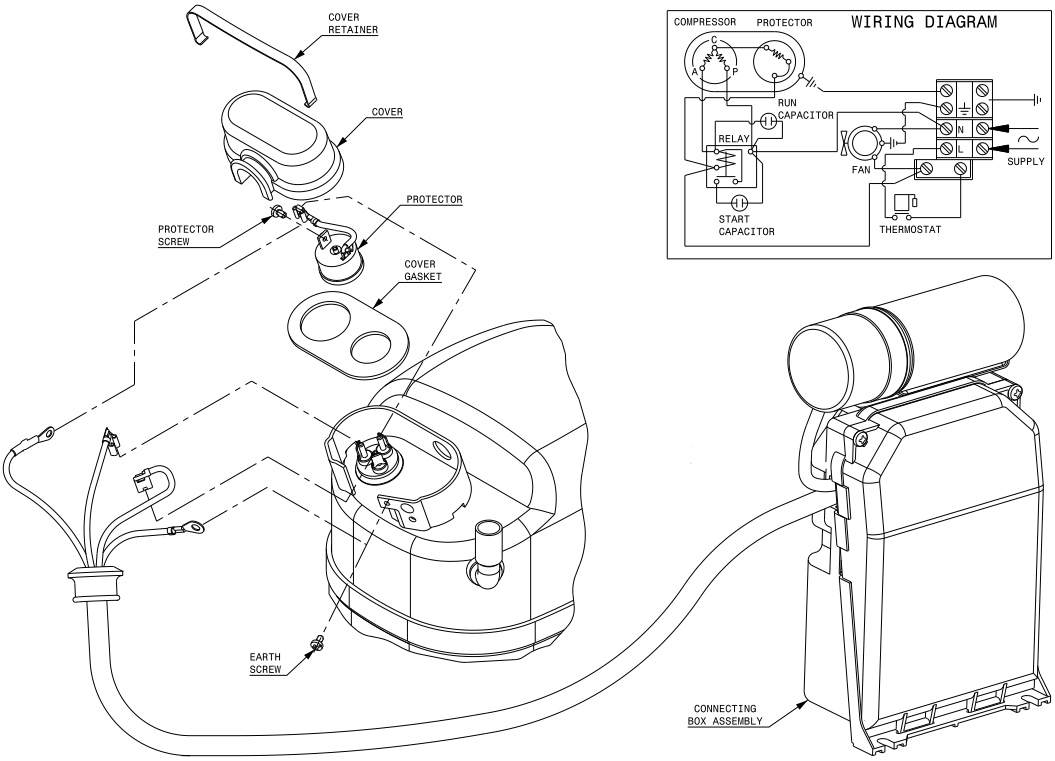

3PH CONNECTION (S range)

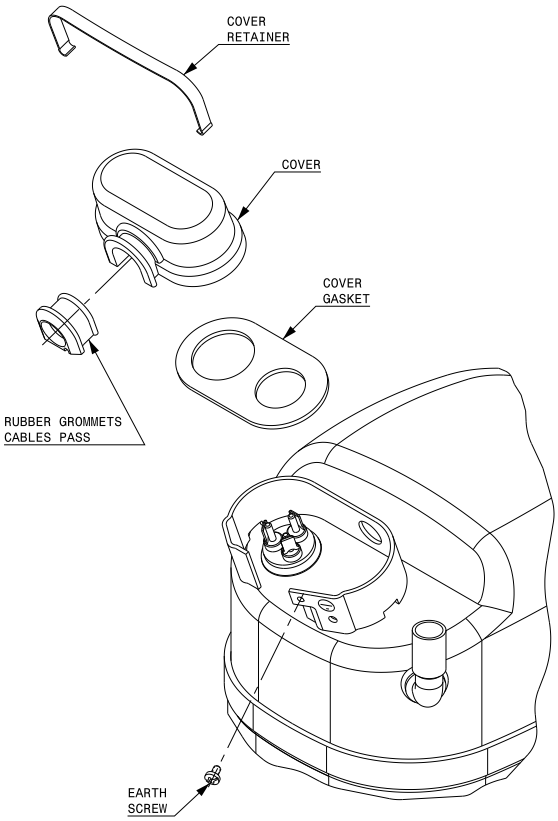

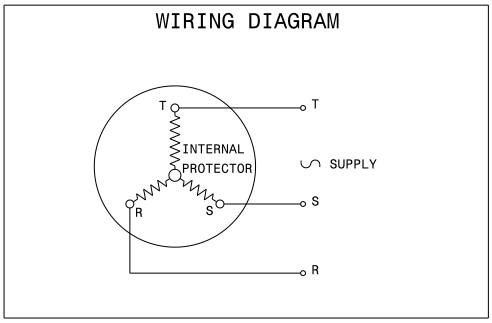

Packaging & Logistics

Single Box

	Box dimensions (mm)			Pallet dimensions (mm)	
Range	Length	Width	Height	Length	Width
Small L	250	165	141/151	1010	1010
B	250	165	151/166	1010	1010
U	290	194	180/198	1200	1050
L & P	290	194	180/198/209/227	1200	1050
X (w/ connecting box)	315	187	235	1050	1050
X	342	202	242	1050	1050
S	275	209	410	1010	1010

Tray

	Tray dimensions (mm)		Pallet dimensions (mm)	
Range	Length	Width	Length	Width
Small L	1110	815	1135	830
B	1110	815	1135	830
U (TIR)	1120	810	1200	800
U (Container)	1120	810	1120	800
L & P	1060	990	1050	1050
X	1050	1020	1050	1050
S	1050	1050	1050	1050

Quantities by Pallet Compressors

	Tray			Single Box		
Range	Qty / Level	Nº Levels	Qty / Pallet	Qty / Level	No. Levels	Qty / Pallet
Small L	25	6	150	24	5	120
B	25	5	125	24	5	120
U	18	5	90	20	5	100
L	24	5	120	20	5	100
P	24	5	120	20	5	100
X	17	4	68	16	4	64
X w/ connecting Box	17	4	68	15	4	60
S	24	2	48	16	3	48

Pallet Product Layout

Single Box Pallet Distribution

Small L, B Range

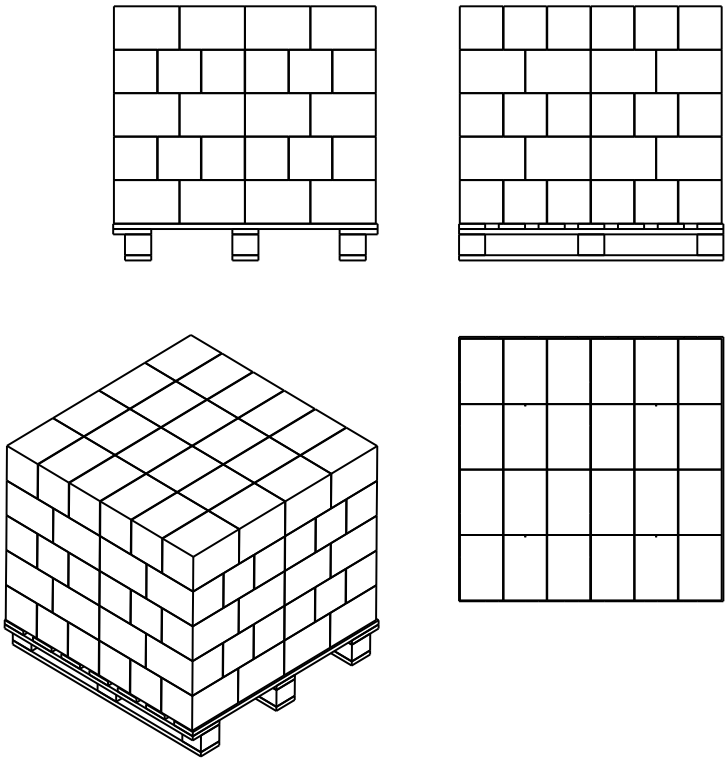

U, L & P Ranges

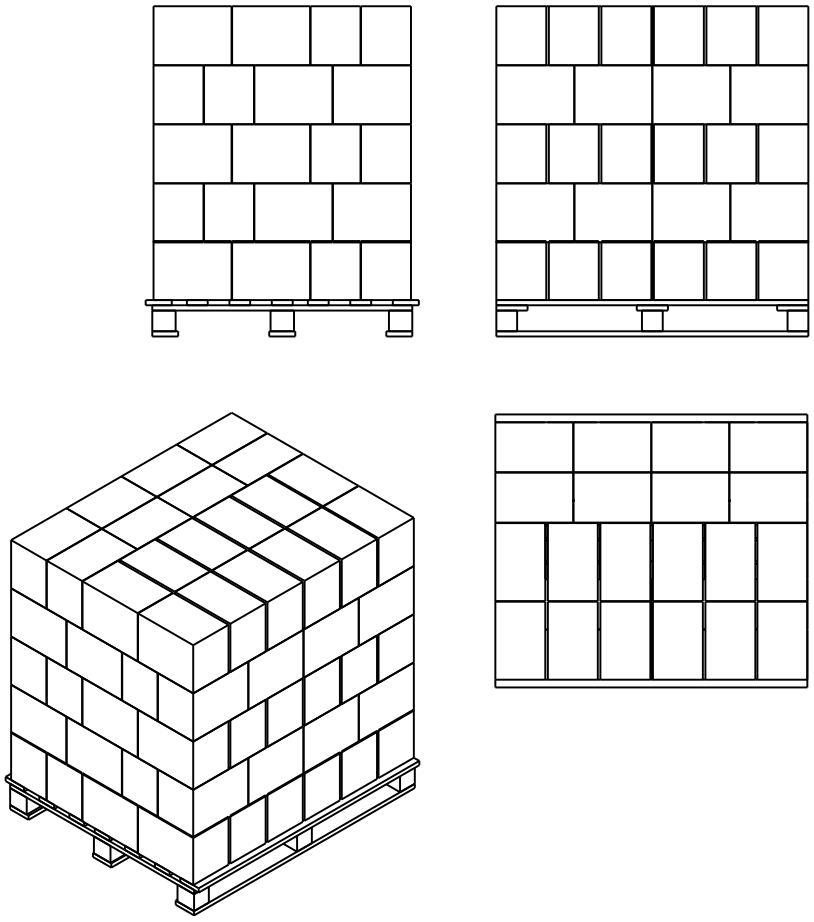

S Range

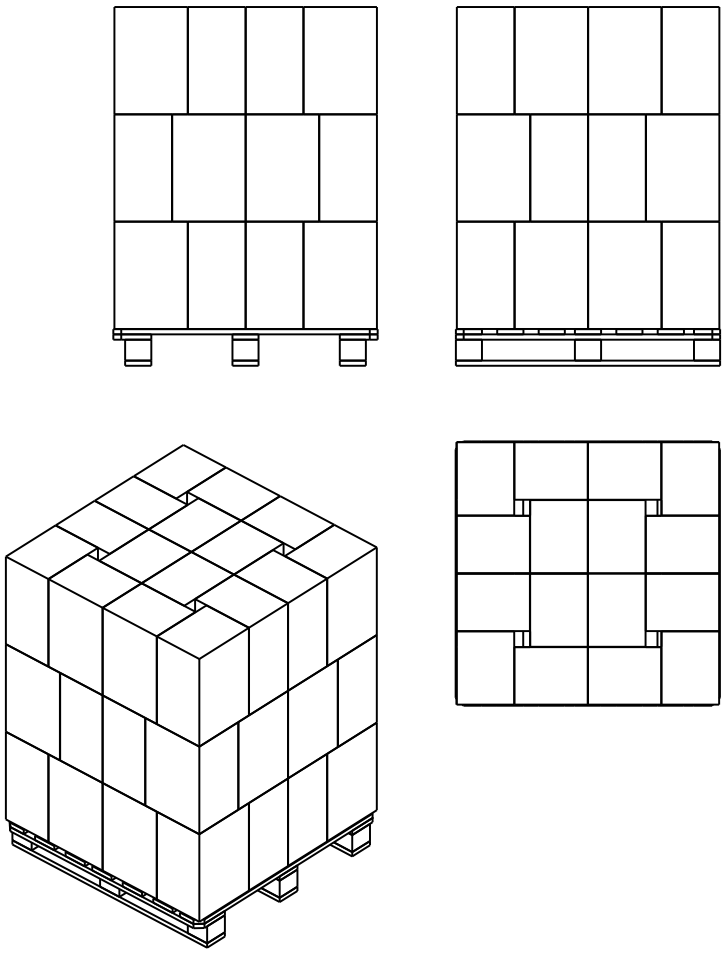

X Range (con caja conex.)

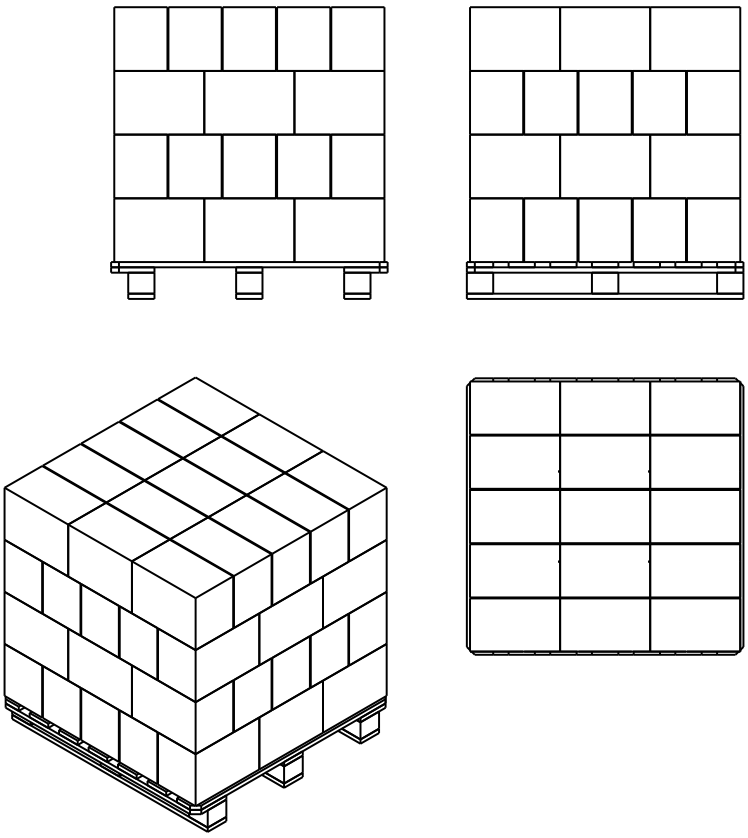

X Range (sin caja conex.)

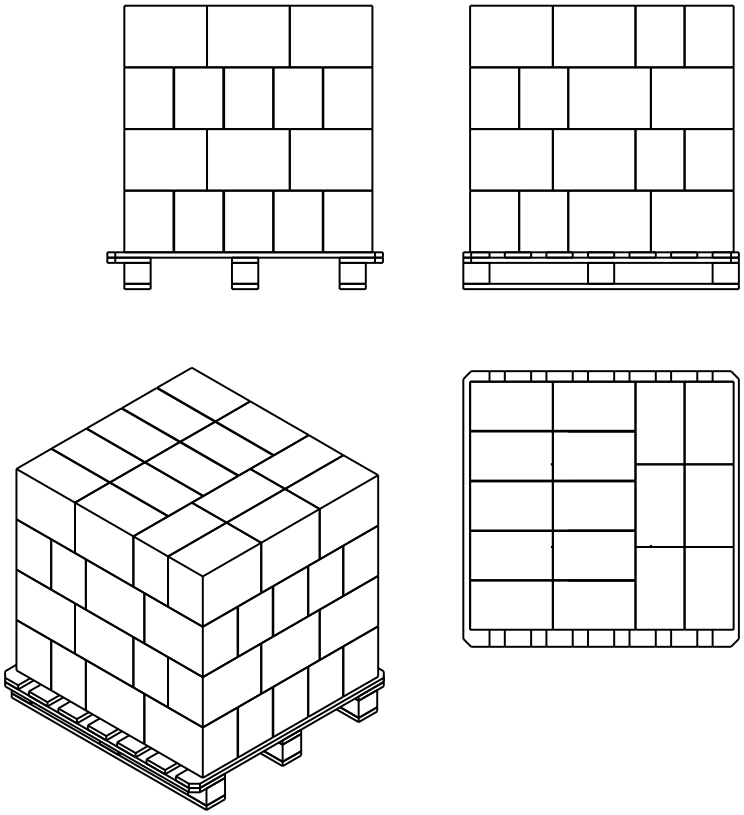

Tray per Pallet

Small L & B compressor tray distribution

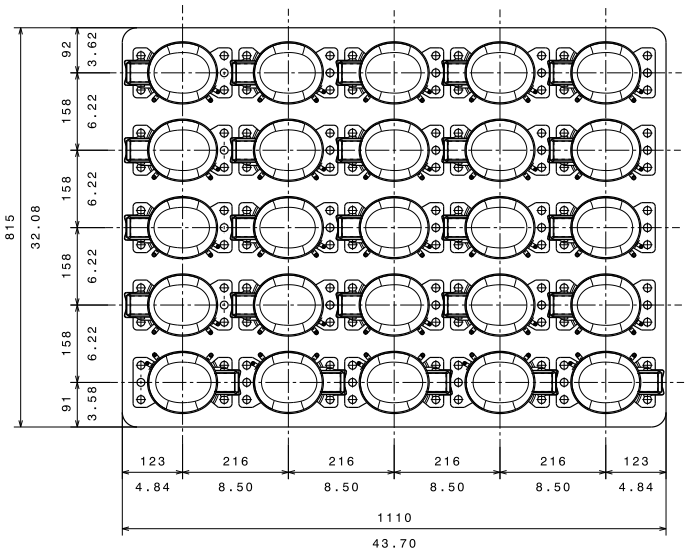

U compressor tray distribution

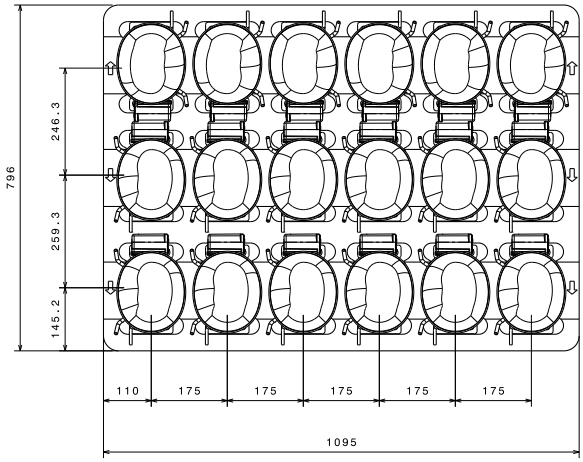

L and P compressor tray distribution

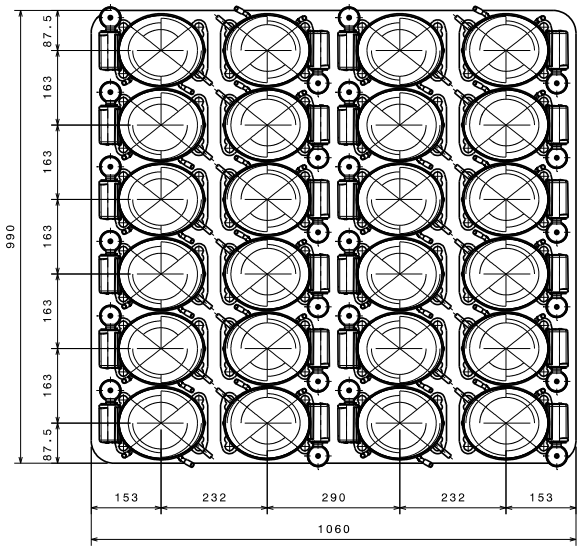

X compressor tray distribution

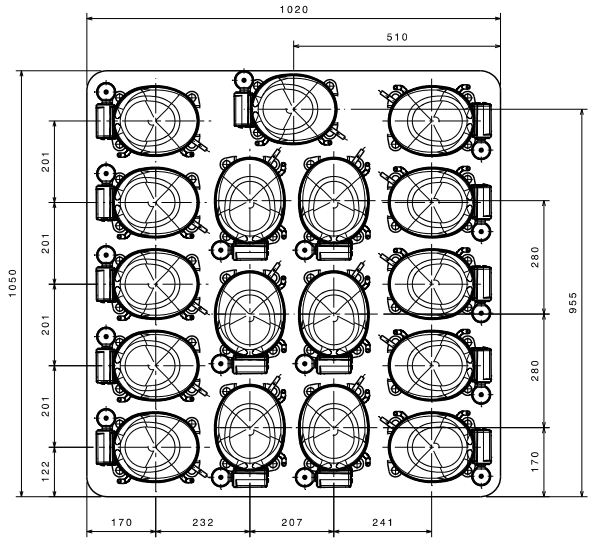

S compressor tray distribution

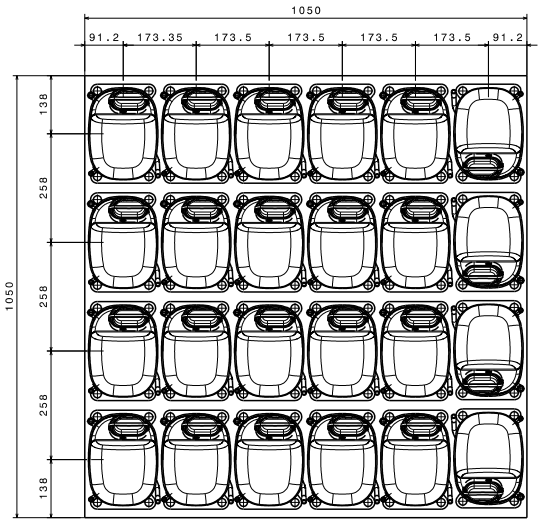

Pallet label

Receiver **CUSTOMER**	Customer **00000**	Customer part number **00000000-000**
Work Order **00000**	Supplier name **HUAYI COMPRESSOR**	
Part Name(P) **000000**	**0000** **A00 / MUELLE** **000000** **DD.MM.YYYY 00:00:00**	
Quantity(Q) **00,000 UN**	Description **COMPRESSOR MODEL**	
Supplier ID(V)	Date **DD/MM/YYYY**	Drawing number
Palet number **0000000000**	Part number barcode	

Single Boxes Drawings

Small L & B Range

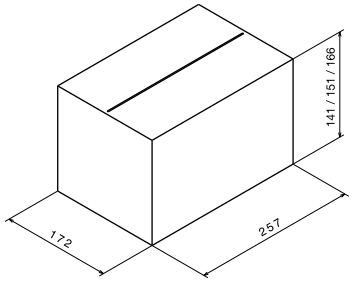

U Range

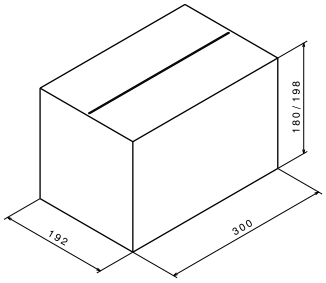

L & P Ranges

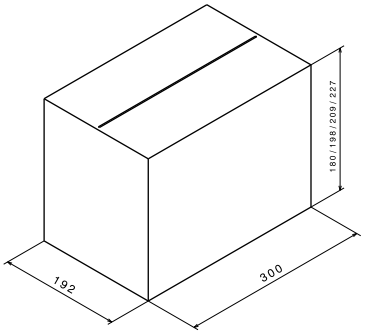

X Range

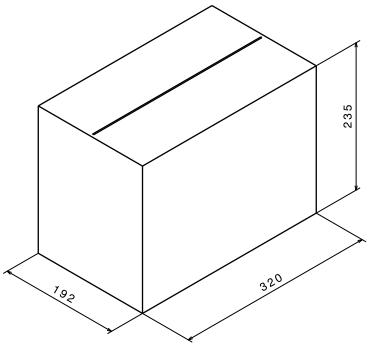

X Range with connecting box

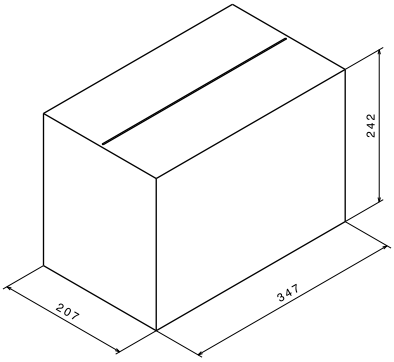

S Range

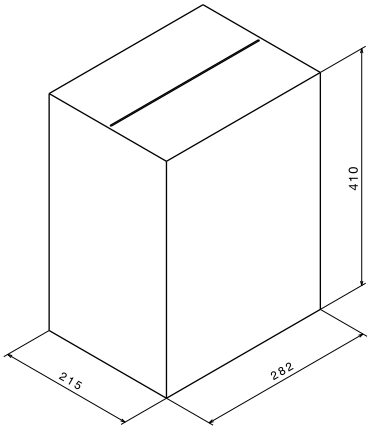

GLT80TDC Compressor

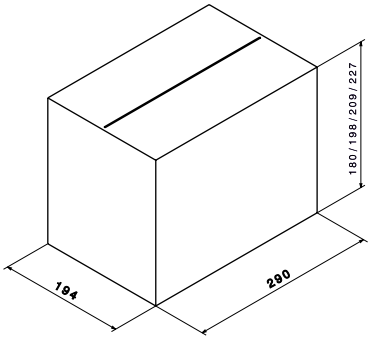

notes

GENERAL CATALOGUE · 07/2018 · 103994

HUAYI
COMPRESSOR
BARCELONA

Huayi Compressor Barcelona, S.L.
Antoni Forrellad, 2 · 08192
Sant Quirze del Vallès · BCN · Spain
Phone: +34 93 710 60 08
Fax +34 93 710 69 58

www.huayicompressor.es